ZERO FX™
ZERO FXE™
ZERO FXS™

ZERO MOTORCYCLES
2022 OWNER'S MANUAL

Introduction 1.1

Introduction 1.1
- An Important Message From Zero 1.1
- California Proposition 65 ..... 1.1
- California Perchlorate Advisory 1.1
- About This Manual 1.2
- Useful Information For Safe Riding 1.2
- When To Charge Your Z-Force® Power Pack™ 1.3

Identification Numbers 1.4
- Owner Information 1.4
- Power Pack Serial Number 1.5
- Motor Serial Number 1.5
- Vehicle Identification Number (VIN) 1.5

General Information 1.6
- Emissions Information 1.6
- Vehicle Range 1.7
- Maximizing Your Range 1.8
- Transporting 1.9

Safety Information 2.1

General Safety Precautions 2.1
- General Safety Precautions 2.1
- Important Operating Information 2.2

Location of Important Labels 2.3
- Location of Important Labels 2.3

Controls and Components 3.1

Controls and Components 3.1
- Motorcycle Controls 3.2
- Left Side View 3.4
- Right Side View 3.6
- Dash Overview 3.8
- Warning Indicator Lights 3.10
- Dash Settings 3.13
- Handlebar Controls 3.16
- Performance Level Mode Button 3.19
- Front Brake Lever Adjuster (FXE and FXS only) 3.20
- Parking Brake Operation (if equipped) 3.20
- Smartphone Application 3.21
- Bluetooth® Pairing 3.21

Starting and Operating 4.1

General Operation 4.1
- General Operation 4.1
- Key Switch/Steering Lock Positions 4.2
- Motorcycle Tip-Over Sensor 4.3
- Operating Your Motorcycle 4.4
- ABS (Anti-lock Braking System) 4.6
- Front Suspension Adjustment 4.9
- Rear Shock Adjustment 4.14

Charging and Power Pack Information 5.1

Power Pack and Charging 5.1
Power Pack 5.1
Modular Power Pack System - Removal and Installation (if equipped) 5.3
On-Board Power Pack Charger 5.5
Charging the Power Pack 5.6
Quick Charging (Off-Board Accessory Charger) 5.8
Public Charging Stations 5.12
Add On Electrical Equipment 5.12

Maintaining Your Motorcycle 6.1

Maintaining Your Motorcycle 6.1
Owner's Responsibilities 6.1
Parts/Maintenance Items 6.2
Service History 6.2
Scheduled Maintenance 6.2
Component Fasteners 6.6

Power Pack 6.9
Power Pack 6.9

General Maintenance 6.10
Brakes 6.10
Parking Brake (if equipped) 6.13
Suspension 6.14
Wheels And Tires 6.14
Tire Inflation 6.15
Drive Belt 6.16
Drive Chain (Optional) 6.20
Seat Removal - FXE 6.23
Side Panel - FXE 6.24
Front Panel - FXE 6.25
Front Panel - FX/FXS 6.26
Headlight Alignment 6.27
Headlight Bulb Replacement - FX/FXS 6.28
Headlight Bulb Replacement - FXE 6.29
Turn Signal Light Bulb Replacement 6.30
Brake/Tail Light Bulb Replacement 6.30
Running Light Bulb Replacement 6.31
Cleaning 6.32
Parking and Long Term Storage 6.33
Zero Motorcycles Accessories 6.33
Fuses 6.33

Troubleshooting 7.1

Troubleshooting 7.1
Electric Motorcycle Precautions 7.1
Troubleshooting Your Motorcycle 7.1
System Warning Indicator 7.2
Diagnostic Codes 7.5
General Troubleshooting 7.8
Battery Management System 7.9
Cold and Hot Weather Considerations 7.15
Safety Interlocks 7.16

Technical Specifications 8.1

Specifications (Europe) 8.1

VIN Breakdown 8.1
Zero FX 8.2
Zero FXE (11kW) 8.4
Zero FXE 8.6

Specifications (Rest Of The World) 8.8

VIN Breakdown 8.8
Zero FX 8.9
Zero FXE 8.11
Zero FXS 8.13

Warranty and Customer Information 9.1

Limited Warranty Information 9.1

Who Is The Warrantor? 9.1
Who Does This Limited Warranty Cover? 9.1
What Does This Limited Warranty Cover? 9.1
What Is The Coverage Period Of This Limited Warranty? 9.2
What Is Not Covered By This Limited Warranty? 9.3
What Other Limitations Or Disclaimers Apply To This Limited Warranty 9.5
What Are Your Responsibilities As A Customer? 9.6
What Will Zero Motorcycles Do Under This Limited Warranty? 9.7
How Does This Limited Warranty Relate To State Law? 9.7
How Do You Obtain Service Under This Limited Warranty? . 9.8
How Do I Transfer Ownership And The Limited Warranty 9.9

Customer Information 9.10

Customer Assistance 9.10
Reporting Safety Defects 9.11

Maintenance Record 10.1

Maintenance Record 10.1

Service History 10.1

Index

First Responder Information – High Voltage Component Locations

An Important Message From Zero

Congratulations and thank you for purchasing the 2022 Zero FX, Zero FXE or Zero FXS electric motorcycle; we welcome you to the community of Zero Motorcycles riders. This manual is designed to provide you with a better understanding of the operation, inspection, and basic maintenance requirements of this motorcycle.

Zero continually seeks advancements in product design and quality. Therefore, this manual contains the most current product information available at the time of printing. Because of this, your motorcycle may differ from the information supplied in this Owner's Manual. No legal claims can be made on the basis of data in this manual. When it comes time to sell your Zero FX/FXE/FXS, please ensure that this manual stays with the motorcycle; it is, by law, an important part of the vehicle. If you have any questions concerning the operation or maintenance of your motorcycle, please contact your authorized Zero Motorcycles dealer.

For 24 hour updates and additional information about your motorcycle, visit the Owner Resources section of the Zero Motorcycles website:

http://www.zeromotorcycles.com/owner-resources/

California Proposition 65

WARNING: Operating, servicing and maintaining a passenger vehicle or off-highway motor vehicle can expose you to chemicals including engine exhaust, carbon monoxide, phthalates, and lead, which are known to the State of California to cause cancer and birth defects or other reproductive harm. To minimize exposure, avoid breathing exhaust, do not idle the engine except as necessary, service your vehicle in a well-ventilated area and wear gloves or wash your hands frequently when servicing your vehicle. For more information go to www.P65Warnings.ca.gov/passenger-vehicle.

California Perchlorate Advisory

WARNING: Certain components of this motorcycle such as lithium batteries may contain perchlorate material. Special handling may apply for service or end of life disposal. See www.dtsc.ca.gov.

About This Manual

This manual covers the following motorcycles (standard features and equipment include Integrated Z-Force® Power Pack and charger, belt drive (optional chain drive), and regenerative braking):

- Zero FX: Dual Sport
  - Wire Wheels

    21-inch Diameter Front Wheel

    18-inch Diameter Rear Wheel
  - Dual Sport Tires
- Zero FXS: Supermoto
  - Cast Wheels (17-inch diameter)
  - Street Tires
- Zero FXE
  - ZF7.2 Power Pack
  - LED Headlight
  - Modified body panels

Locating and referencing information

A good place to locate information about the motorcycle is in the index in the back of the manual.

The terms “right” or “left” refer to the rider’s right or left when sitting on the motorcycle.

Useful Information For Safe Riding

This manual contains the word **WARNING** to indicate something that could hurt you or others. It also contains the word **CAUTION** to indicate things that could damage your motorcycle.

WARNING! Please read this manual carefully and completely before operating this motorcycle. Do not attempt to operate this motorcycle until you have attained adequate knowledge of its controls and operating features, and until you have been trained in safe and proper riding techniques. Regular inspections and proper maintenance, along with good riding skills, help you safely enjoy the capabilities and the reliability of this motorcycle. Disregarding the aforementioned, however, may render the warranty invalid.

This symbol is located in various locations on the motorcycle to inform you that exposure to high voltage can cause shock, burns and even death.

The high voltage components on the motorcycle should be serviced only by technicians with special training.

High voltage cable or wiring has an orange covering. Do not probe, tamper with, cut, or modify high voltage cable or wiring.

When To Charge Your Z-Force® Power Pack™

Proper care of the motorcycle's power pack is essential! In order to maximize the life of your power pack(s), Zero Motorcycles has established the following guidelines for proper charging and operation.

- If the power pack is fully discharged, it must be charged within 24 hours to prevent damage to the power pack.
- If you ride regularly, but your ride doesn't require most of your power pack's capacity, your power pack will benefit from not being charged to 100% unnecessarily. In hot climates, going a few rides before recharging will prolong your power pack's life by limiting the amount of time it spends parked at a high state of charge.
- If you ride infrequently, once per week or less, recharging the evening prior to when you need to be at full charge is much better for your power pack than charging it right after each ride and having it sit for days between rides at a high state of charge.
- If the power pack's state of charge is below 30%, we recommend you charge the power pack to at least 60% and then disconnect the charger.

CAUTION: Never store your motorcycle at a low state of charge (below 30% SOC). Leaving the power pack at a low state of charge for a prolonged period could damage it and void your warranty.

- If you ride in hot weather (>35ºC / 95ºF) or spend a majority of your ride at freeway speeds, the power pack will benefit from not being charged "hot". Allowing your pack a few hours to cool off prior to recharging will prolong its life. You may also benefit from off-peak electricity rates by waiting until the evening to charge.
- Once your motorcycle has been charged, we recommend that you disconnect the charger. The power pack will go into "hibernate mode" and self-discharge extremely slowly over time. So, if you haven't ridden it for a long while and need to charge it to 100% SOC, plug it in to the charger for a few hours prior to your ride. Unplugging the charger when not needed ensures the best long-term health of your power pack.
- For long term storage (>30 days) of your motorcycle, see "Parking and Long Term Storage", on page 6.33.
- To ensure best performance of your Zero motorcycle over its lifetime, please be certain that the motorcycle's firmware is up to date. If you have questions, please contact the nearest Zero Motorcycles dealer.

For other important information regarding the power pack, see "Power Pack", on page 5.1.

Owner Information

Record information pertaining to your motorcycle here. When contacting your dealer, you may need to provide this information.

Dealer Information	Motorcycle Information
Name _____	VIN _____
Address _____	Model _____
_____	Power Pack Serial Number(s)
_____	_____
Telephone No. _____	_____
E-mail _____	Motor Serial Number
Date of Purchase _____	_____

ZOM1084

Power Pack Serial Number

The Power Pack serial number is located in following locations.

- ZF3.6 - Rear of power pack below connector housing.
- ZF7.2 - Top right of power pack beneath retaining rail.

Motor Serial Number

The motor serial number is stamped on the right hand side of the motor housing.

Vehicle Identification Number (VIN)

The VIN is a 17-digit number stamped on the head tube of the frame (A). Do not alter or remove this number as it is the legal identifier for your motorcycle.

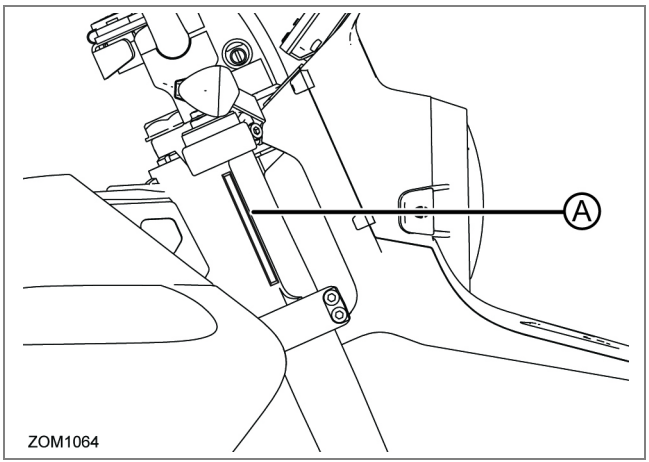

See the location of all important labels on page 2.3.

Chassis Number

The motorcycle chassis number information is affixed to the head tube.

Emissions Information

The Zero FX/FXE/FXS electric motorcycle is a true freeway-capable zero-emissions vehicle under California Air Resources Board (CARB), U.S. Federal (EPA), and European Union standards. It uses no gasoline or other liquid fuel. It has no tailpipe and therefore no tailpipe emissions. It also has no exhaust or evaporative emissions. Because the Zero FX/FXE/FXS runs solely on electricity, it is the only kind of vehicle which actually gets cleaner in terms of air pollution each year, as the electricity grid gets cleaner and more renewable. Zero Emissions Vehicles (ZEV's) offer greater efficiency, and can help solve the serious air pollution, global warming, and energy security problems facing the country and the world.

CAUTION: Please use only Zero approved parts and accessories for your Zero Motorcycle. Parts and accessories for your Zero Motorcycle have been checked and tested for safety and suitability. Zero is unable to accept any liability whatsoever for parts and accessories which have not been approved.

Vehicle Range

The range of an electric vehicle is defined as the distance the vehicle travels on a single full charge of the power pack. Just like EPA mileage estimates on an automobile, “your mileage may vary.” Your range results are a direct reflection of your riding habits. The more conservatively you ride, the better range you can expect from your Zero FX/FXE/FXS motorcycle.

Some of the factors which affect range include: speed, acceleration, number of starts and stops, ambient air temperature, as well as changes in elevation. The combination of these factors, as you travel from one point to another, defines your trip profile. In addition, tire pressure and payload are important considerations.

We suggest that you ride conservatively when you first get your Zero FX/FXE/FXS motorcycle, and get to know your motorcycle and your commute. Once you become familiar with the range versus performance of your motorcycle, then you can adjust your riding characteristics if you so desire. This applies mainly to riders with trip profiles which are at the edge of the performance envelope.

The reported motorcycle range values in this Owner’s Manual are measured using different standards, according to the country the Zero motorcycle is being sold.

For Zero motorcycles sold within European countries, range is calculated using European Union regulation EU 134/2014 Annex VII.

For Zero motorcycles sold in all other countries, range is calculated using the following types of industry standard test procedures:

1. “City”: This range test is specified to determine riding during “stop-and-go” operation typically found in urban areas. This estimate is provided following the SAE J2982 Riding Range Test Procedure for On-Highway Electric Motorcycles to provide a reasonable and consistent basis for manufacturers to inform prospective owners of the riding range that can be expected under specified operating conditions. Actual range will vary based on riding conditions and habits.
2. “Highway”: This test procedure uses two separate constant speeds of 55 mph (89 km/h) and 70 mph (113 km/h) to simulate highway riding.

Both of these test procedures are run on a single charge, in order to report the associated measured range values.

Range values labeled “Combined” are based on a calculation that assumes a duty cycle comprised of 50% City / 50% Highway.

See technical specification charts on page 8.8 through page 8.13 for these ranges.

Maximizing Your Range

Range varies in electric motorcycles similarly to how it varies in gas motorcycles. However, the big difference between electric and gas is that energy consumption is averaged over a shorter distance on an electric motorcycle. Electric motorcycles are designed for convenient daily recharges versus less frequent and less convenient trips to the gas station. As a result, the same electric motorcycle often yields different ranges from one full recharge to the next.

How to Predict the Range

To generally predict how an electric motorcycle's range will be affected, you can use the four factors:

- route
- rider
- weather
- motorcycle

By considering each of these factors, you can use specifications such as 'city range' as standards to estimate what the motorcycle's real world range will be under your particular usage case.

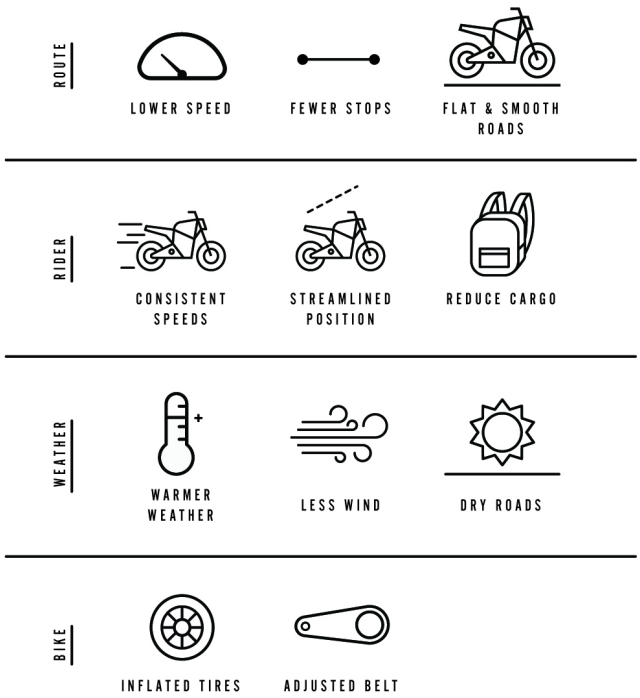

ZOM1065

Transporting

It is recommended that the motorcycle be tied-down using ratchet straps while it is being transported. Place the ratchet straps around a frame contact point. Soft straps must be used to reduce scratches or other damage.

Use two ratchet straps in the front and two in the rear. The tie down straps should be at a 45° angle from the motorcycle. Follow the manufacturer's instructions for the ratchet straps you are using.

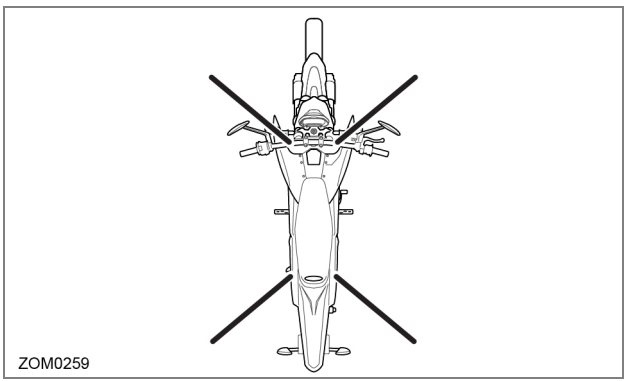
ZOM0259

General Safety Precautions

- This is a performance motorcycle and should be treated with extreme caution.
- Proper safety gear, including a regionally approved helmet, eye protection, riding boots, gloves, and protective clothing should be worn while riding to reduce the risk of potential injury. We highly recommend the use of full height riding boots. It is not recommended to ride without the correct protective clothing; this applies to even short journeys and to every season of the year.
- Read all additional warnings and product instructions in this owner's manual, as well as safety labels, before operating your electric motorcycle.
- Never permit a guest to ride your electric motorcycle without proper instruction.
- Never use alcohol or mind-altering drugs before operating your electric motorcycle.
- Persons unwilling or unable to take responsibility for their actions should not use this motorcycle. You assume all responsibility while operating your motorcycle. The seller assumes no liability for misuse or operator negligence.
- Prior to each use the rider must check everything in the "every ride" column of the maintenance schedule on page 6.1, and the charge level of the power pack as indicated on the dash display charge indicator.
- Your safety depends in part on the good mechanical condition of the motorcycle. Be sure to follow the maintenance schedule and adjustment requirements contained in this manual. Be sure you understand the importance of checking all items thoroughly before riding.
- Modifications to the motorcycle may render the vehicle unsafe and may cause severe personal injury. Zero cannot be held liable for non-approved modifications.
- Be very careful when loading or adding accessories to your motorcycle. Large, bulky, or heavy items may adversely affect the handling and performance of your motorcycle.

Important Operating Information

Several operating considerations are listed below:

- Always turn the key switch and motor stop switch to the OFF position when not actively riding. It is very easy to forget that the motorcycle is powered up because it is silent. An accident can occur if the motorcycle is left powered up while getting on or off the motorcycle.
- Turn the motor stop switch OFF when backing up or pushing the motorcycle while dismounted.
- Use the rear brake when you are stopped on an incline. **Do not hold the motorcycle using partial throttle or damage to the motor may occur**.
- If you plan on riding again the next day or the power pack's state of charge is less than 30%, plug your motorcycle into an AC power source to recharge it. Always use the supplied charging cable as it has been designed for use with your motorcycle's electrical components.
- While unplugged with the key in the OFF position, the motorcycle's electronics will consume a very small amount of power and the power pack will drain extremely slowly. If the motorcycle has been unused for more than 30 days, turn the key switch to the ON position and back to OFF to exit long term storage mode and then allow it to charge for 24 hours to ensure optimal battery balance is restored.

CAUTION: Only charge the Zero power pack with the motorcycle's on-board charger or the approved Zero accessory charger.

- The power pack does not require nor benefit from deep discharging. Leaving a power pack in a discharged state will cause damage. See "When To Charge Your Z-Force® Power Pack™", on page 1.3.
- Failure to follow power pack storage and charging instructions as described in this Owner's Manual may void the warranty of your Zero Motorcycle. These guidelines have been rigorously tested to ensure maximum power pack efficiency and service.

Location of Important Labels

The motorcycle could contain the following information for both North American and European models:

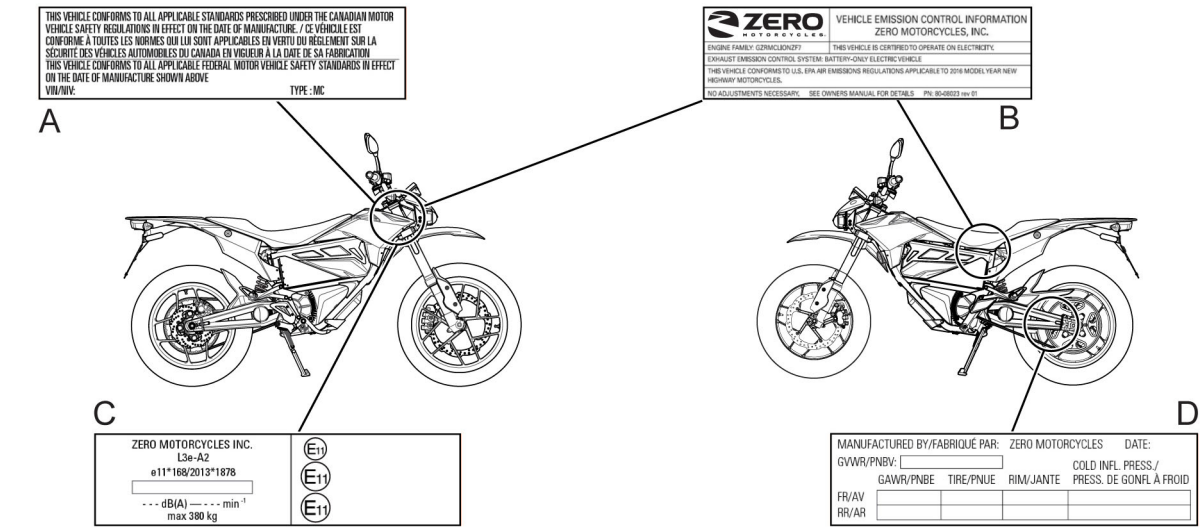

ZOM1066

A. VIN label (North America) - certification label

B. VECI (Vehicle Emission Control Information) label

Note: Location of label varies between motorcycle models.

C. VIN label (European Union) - certification label

D. Tire and loading information label

High Voltage Warning Labels

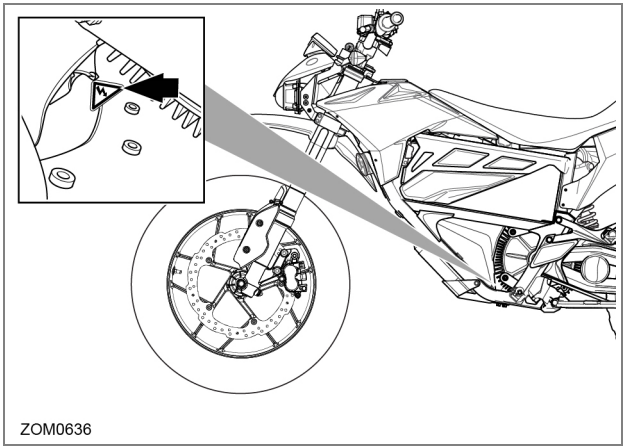

Located near the motor

THIS PAGE INTENTIONALLY LEFT BLANK

Motorcycle Controls

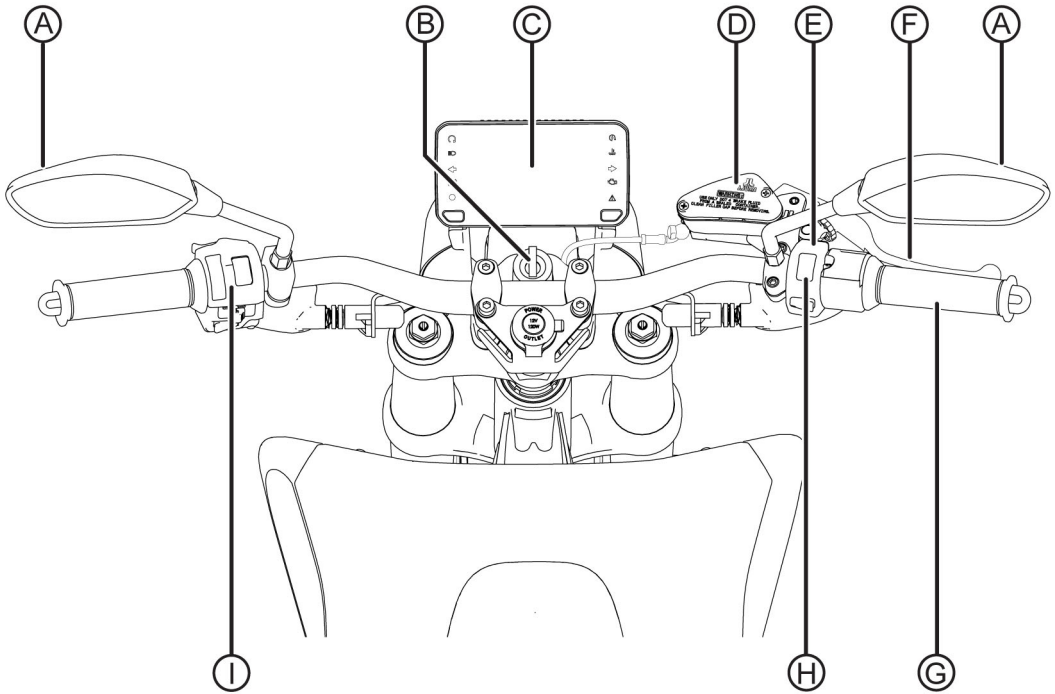

ZOM1067

A. Mirrors

This motorcycle is equipped with convex mirrors. A convex mirror has a curved surface. Convex mirrors offer a greater field of view than a similar flat mirror. However, the greater field of view makes objects seem further away than they really are. Care must be used when judging the distance of objects seen in these mirrors.

B. Key Switch/Steering Lock

For description and operation, see “Key Switch/Steering Lock Positions”, on page 4.2.

C. Dash

For description and operation, see “Dash Overview”, on page 3.8.

D. Front Brake Fluid Reservoir

For description and operation, see “Brakes”, on page 6.10.

E. Right Handlebar Control

For description and operation, see “Handlebar Controls”, on page 3.16.

F. Front Brake Lever

For description and operation, see “Handlebar Controls”, on page 3.16.

G. Throttle Control

For description and operation, see“Handlebar Controls”, on page 3.16.

H. Motor Stop Switch

For description and operation, see “Handlebar Controls”, on page 3.16.

I. Left Handlebar Control

For description and operation, see “Handlebar Controls”, on page 3.16.

Left Side View

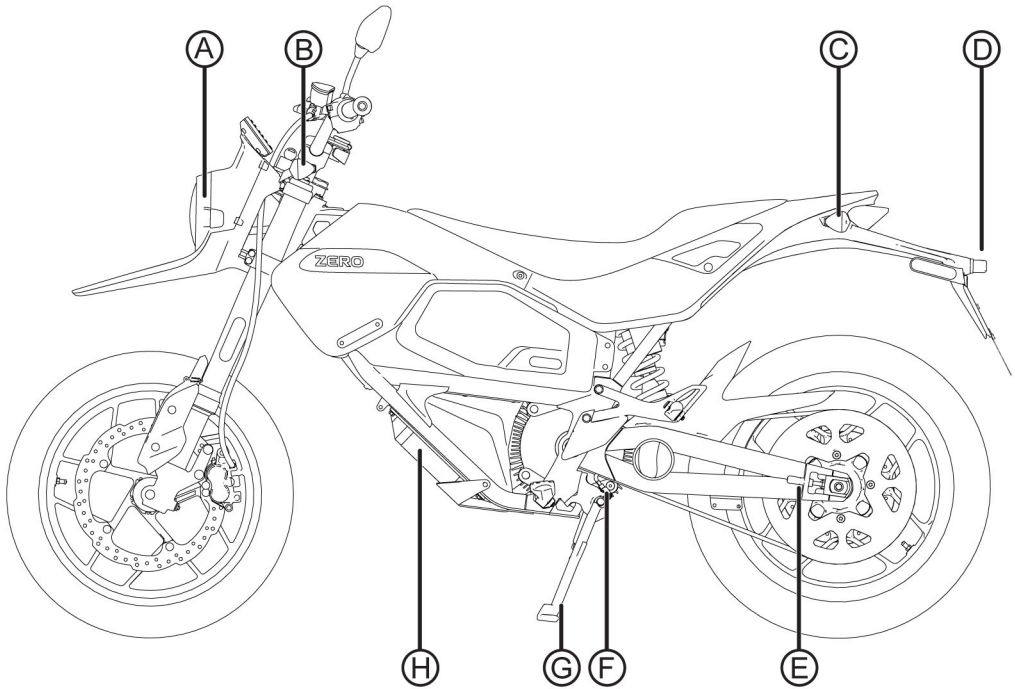

ZOM1068

FXE Model Shown

A. Headlight

- For headlight operation, see “Handlebar Controls”, on page 3.16.
- For headlight bulb replacement, see “Headlight Bulb Replacement - FX/FXS”, on page 6.28.
- For headlight alignment, see“Headlight Alignment”, on page 6.27.

B. Front Turn Signal

- For turn signal operation, see “Handlebar Controls”, on page 3.16.
- For turn signal light bulb replacement, see “Turn Signal Light Bulb Replacement”, on page 6.30.

C. Brake/Tail Light

For brake/tail light bulb replacement, see “Brake/Tail Light Bulb Replacement”, on page 6.30.

D. Rear Turn Signal

For turn signal operation, see “Handlebar Controls”, on page 3.16.

E. Drive Belt Tension Adjuster

For the drive belt adjustment procedure, see “Drive Belt Adjustment Procedure”, on page 6.19.

F. Kickstand Switch

This switch is a safety feature that prevents motor operation when the kickstand is down. If the kickstand were down when riding it could contact the ground causing you to lose control of the motorcycle and cause personal injury.

CAUTION: Park only on a flat firm surface, otherwise the motorcycle could fall over causing damage.

G. Kickstand

The kickstand swings out from the side and supports the motorcycle when parked. The key switch should be in the OFF position when parked.

H. Integrated Power Pack Charger

For description and operation, see “Power Pack”, on page 5.1.

Right Side View

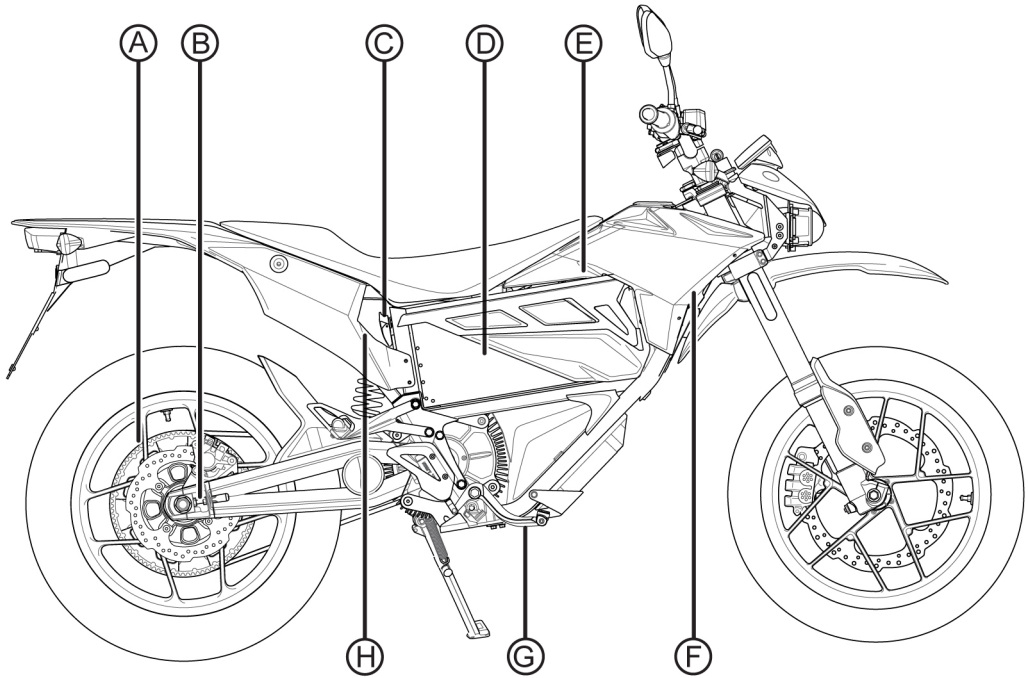

ZOM0638

FXS Model Shown

A. Drive Belt

For description and operation, see “Drive Belt”, on page 6.16.

B. Drive Belt Tension Adjuster

For the drive belt adjustment procedure, see “Drive Belt Adjustment Procedure”, on page 6.19.

C. Power Pack Rail Latch

For description and operation, see “Modular Power Pack System - Removal and Installation (if equipped)”, on page 5.3.

D. Power Pack

For a description, see “Power Pack”, on page 5.1.

E. 12V Fuse Center

For a description, see “Fuses”, on page 6.33.

F. Power Pack Charger

For a description, see “On-Board Power Pack Charger”, on page 5.5.

G. Rear Brake Pedal

The rear brake pedal controls the rear brake when the pedal is pressed. When braking, the throttle should be in the closed position.

H. Rear Brake Fluid Reservoir

For a description, see “Brake Fluid Level Inspection”, on page 6.10.

Dash Overview

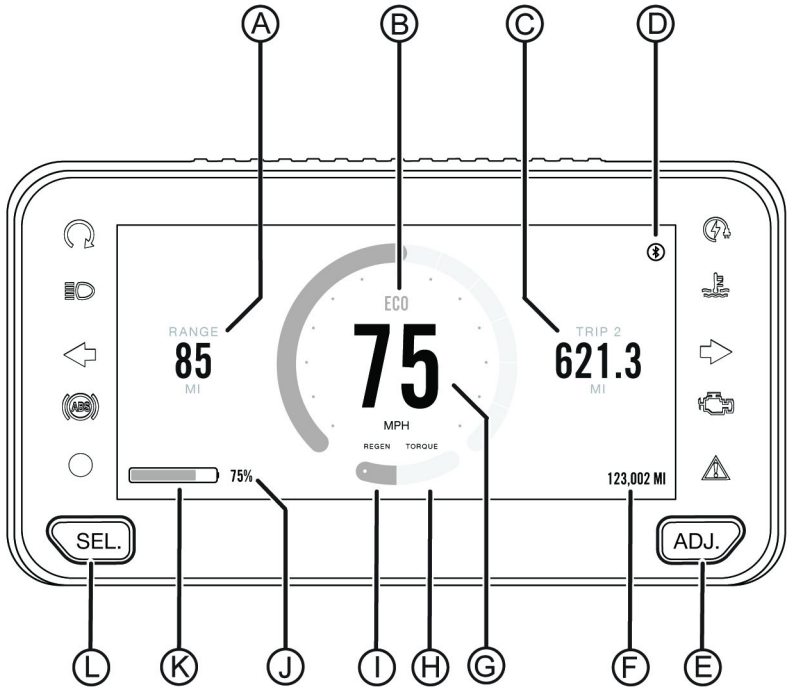

ZOM1069

A. **Display A**

Display A can be customized to display functions which include Range, Motor RPM, Trip 1 and Errors. See “Dash Settings”, on page 3.13.

B. **Performance Modes**

This area displays which performance riding mode (**ECO**, **SPORT**, and **CUSTOM**) has been selected by the rider using the performance level mode button located on the right handlebar control assembly. See “Performance Level Mode Button”, on page 3.19.

C. **Display B**

Displays B can be customized to display functions which include Trip 2, Instant energy use, Average energy use, Lifetime energy use, and Motor Temperature. See “Dash Settings”, on page 3.13.

D. **Bluetooth® Indicator**

This indicator displays when an active Bluetooth® equipped smartphone is paired with the motorcycle. For Pairing instructions, see “Bluetooth® Pairing”, on page 3.21.

E. **Adjust Button (ADJ)**

See “Dash Settings”, on page 3.13.

F. **Odometer**

The odometer displays the total distance the motorcycle has been ridden in kilometers or miles.

G. **Speedometer**

The speedometer is a digital display in either kilometers per hour (km/h) or miles per hour (mph). See “Unit Display - Speed”, on page 3.15.

H. **Output Meter**

The **OUTPUT** meter indicates the amount of **TORQUE** applied to the rear wheel and the **POWER** (energy) being used while riding.

I. **Regen Meter**

The regenerative energy (**REGEN**) meter indicates the amount of **TORQUE** on the rear wheel and the **POWER** (energy) feeding back into the battery of the motorcycle during the regenerative braking process.

J. **Charge Level/Charge Time Indicator**

This area displays the current charge level or the amount of time left for the power pack to reach full charge.

K. **Charge Indicator**

This indicator displays the amount of energy remaining in the power pack.

L. **Select Button (SEL)**

See “Dash Settings”, on page 3.13.

Warning Indicator Lights

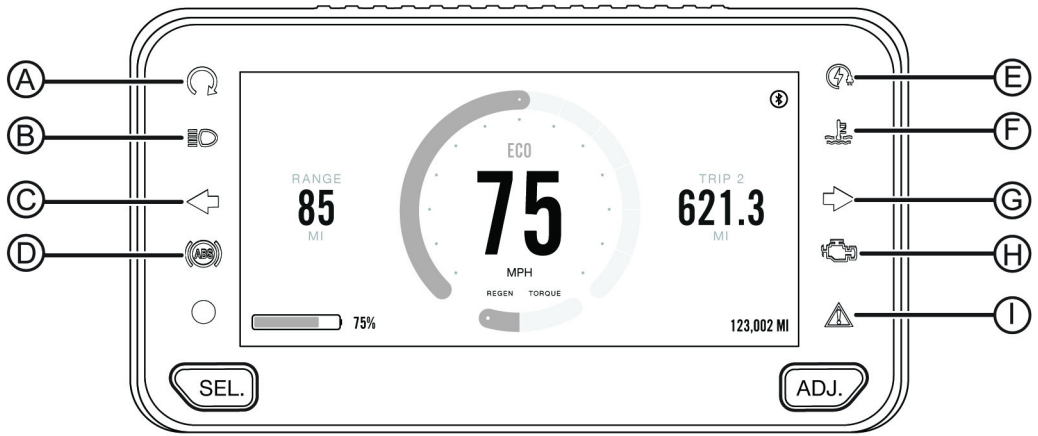

ZOM1070

A		**Armed/Live Indicator**	Blinking light: Indicated the motorcycle has been armed by the rider but is not ready to produce torque. Solid light: Indicates the motorcycle is live or ready to move if the throttle is actuated.
B		**High Beam Indicator**	When the headlight high beam is on, this indicator illuminates blue, and remains on until the high beam is turned off.
C	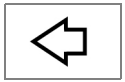	**Left Turn Signal Indicator**	Flashes green when a left turn is selected by the turn signal switch. This arrow remains flashing until the turn signal request has been canceled.
D		**ABS (Anti-Lock Brake System) Indicator**	The indicator illuminates when the key is in the ON position. The light will extinguish when the motorcycle exceeds 3 mm/h (5 km/h). Unless there is a fault, the indicator will stay off until the key is cycled off and back to the ON position again. See “ABS (Anti-lock Braking System)”, on page 4.6 for more information.
E		**Charging Indicator**	Green - slowly flashing: Motorcycle is accepting a charge. Green - solid: Battery is completely charged. Orange - flashing rapidly: Charging error is detected.
F		**Temperature Warning Indicator**	• A flashing light indicates that one or more of the powertrain components are approaching their temperature limit. Performance will not be affected. • If the light illuminates continuously, it indicates that one or more of the powertrain components have exceeded their temperature limit. Performance will be reduced until the component(s) have cooled sufficiently. See “Temperature Indicator”, on page 4.5.

G		**Right Turn Signal Indicator**	Flashes green when a right turn is selected by the turn signal switch. This remains flashing until the turn signal request has been canceled.
H		**Check Engine Light**	Indicates the motorcycle has detected an error, causing it to enter into a state of permanent torque reduction. This light will be accompanied by a dash error code. See “Diagnostic Codes”, on page 7.5 for more information. Contact your dealer and arrange to have the motorcycle serviced.
I		**System Warning Indicator**	Indicates a system fault has been detected. See “System Warning Indicator”, on page 7.2 for more information.

Dash Settings

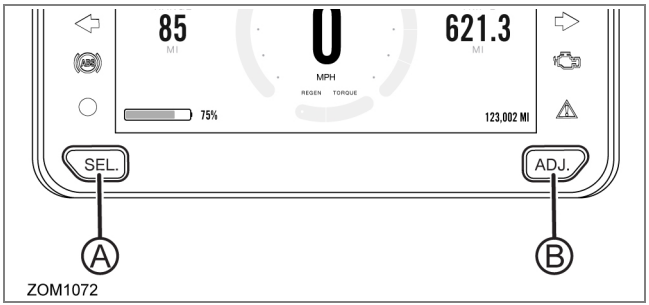

The displays on the dash can be customized to your personal preferences by using the **ADJ** (Adjust) and **SEL** (Select) buttons.

A. **Select Button (SEL)**

   By momentarily pressing or holding the **SEL** button you can reset or select fields in Display A and Display B, and change the display units.

B. **Adjust Button (ADJ)**

   By momentarily pressing or holding the **ADJ** button you can reset fields and toggle through the trip menus and display options.

Note: Once a feature is selected, it will stop flashing after 15 seconds if no further button press is detected, and the dash will return to its normal operating mode.

Display A

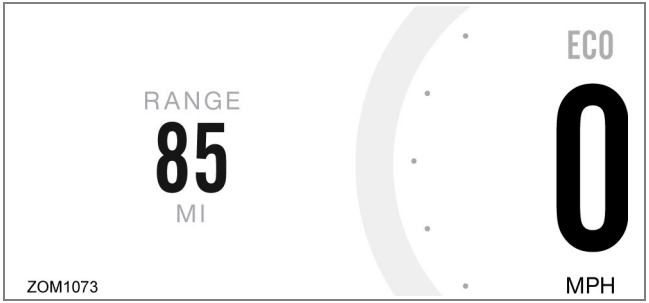

To select Display A with the dash in its normal operating mode, momentarily press the **SEL** button once. Press the **ADJ** button to toggle through the following fields:

- RANGE - Displays the estimated range based on learned riding style and usage.
- MOTOR - Displays motor RPM.
- TRIP 1 - Displays individual trip mileage and is reset by pressing and holding the **ADJ** button for 2 seconds.

  Note: Trip 1 is reset each time the battery is recharged to 100%.

- ERROR - Displays 2-digit diagnostic code. See “Diagnostic Codes”, on page 7.5

Display B

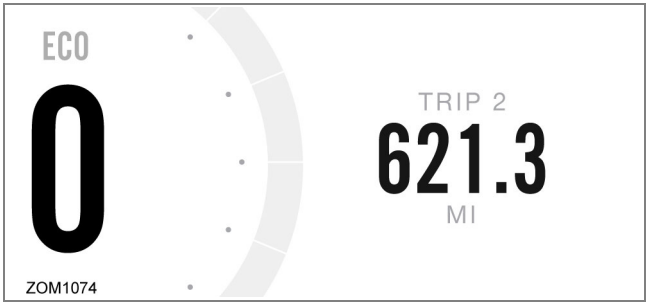

To select Display B with the dash in its normal operating mode, momentarily press the **SEL** button twice. Press the **ADJ** button to toggle through the following fields:

- TRIP 2 - Displays individual trip mileage and is reset by pressing and holding the **ADJ** button for 2 seconds.
- INSTANT - Displays the current energy usage in watt hours (Wh), per mile (mi), or kilometer (km), depending on the currently selected display unit.
- AVERAGE - Displays the average energy usage during duration of Trip 1 in watt hours (Wh), per mile (mi), or kilometer (km), depending on the currently selected display unit.

  Note: The average energy use is reset each time the battery is recharged to 100%.
- LIFE - Displays the average energy usage over the life of the motorcycle in watt hours (Wh), per mile (mi), or kilometer (km), depending on the currently selected display unit.
- MOTOR - Displays the temperature of the motor in Fahrenheit (F) or Celsius (C).

  Note: The temperature may not read accurately during the first 5 miles of a ride while the application is calibrating itself.

Unit Display - Speed

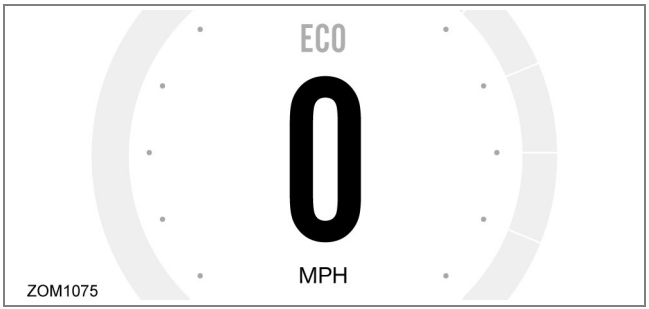

To change the units that speed is shown in:

1. With the dash in its normal operating mode press and hold the **SEL** button for 5 seconds.
2. Momentarily press the **ADJ** button to select English (MPH) or metric (km/h).
3. Momentarily press the **SEL** button to return to normal operating mode.

Unit Display - Temperature

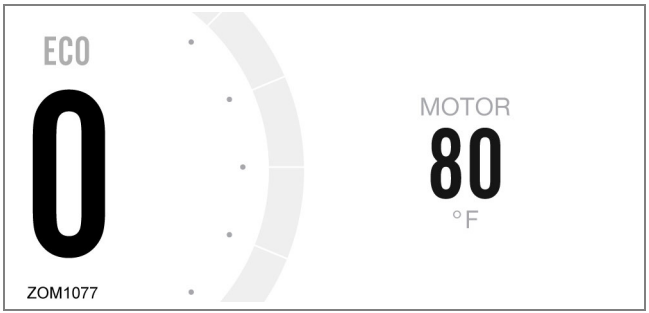

To change the units that the temperature display is shown:

1. With the dash in its normal operating mode press and hold the **SEL** button for 5 seconds.
2. Momentarily press the **SEL** button 5 times, the Temp icon on the lower dash will start to flash.
3. Press the **ADJ** button to toggle between °F or °C on the display.
4. Momentarily press the **SEL** button to return to normal operating mode.

Handlebar Controls

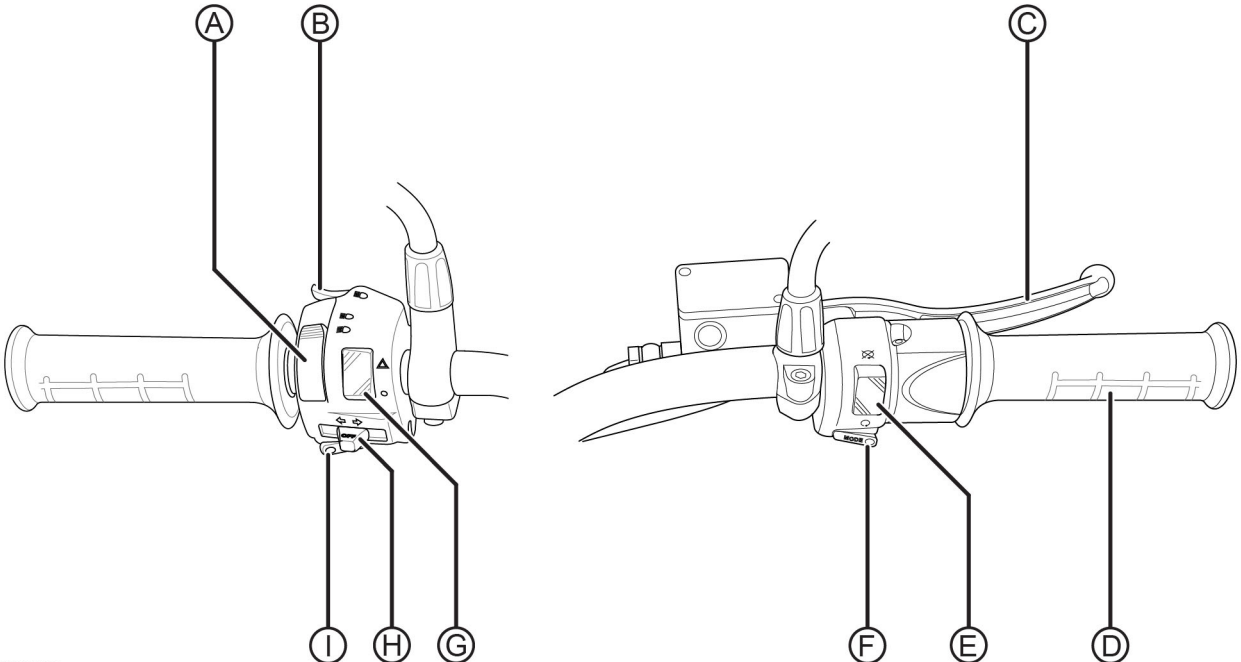

ZOM0360

A. Headlight High/Low Beam Switch

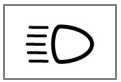

When the switch is pushed, the headlight changes from low beam to high beam. It stays in the selected position until it is switched back. When in high beam position, the high beam indicator on the lower dash illuminates.

B. Flash-to-Pass

When the headlight is in the low beam position, push the flash-to-pass switch and the high beam illuminates and stays illuminated until the switch is released. When released, this switch defaults back to the low beam position. The high beam indicator also illuminates.

C. Front Brake Lever

The front brake lever controls the front brake when the lever is squeezed. When braking, the throttle should be in the closed position. The brake light also illuminates.

D. Throttle Control

Twist the throttle in a counter-clockwise rotation (A) to energize the motor and start the motorcycle in a forward direction. Release the throttle and it snaps back to the closed position (B), de-energizing the motor, and regenerative braking begins.

When the motorcycle is moving and the throttle control is in the fully closed position, the regenerative braking feature activates. Regenerative braking takes some of the energy from the moving motorcycle and turns it back into electrical energy. This energy is then stored in the power pack, contributing to increased energy efficiency. A slight drag is felt when the regenerative braking is activated. If you want to coast without the regenerative braking, hold the throttle just off of the fully closed position.

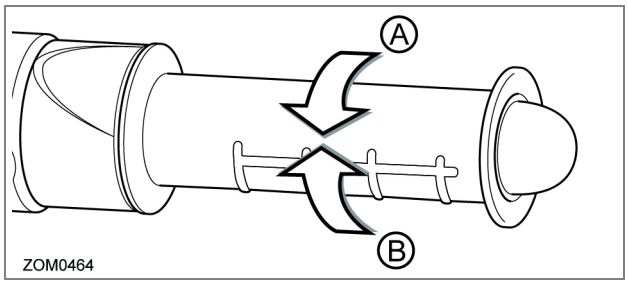

E. Motor Stop Switch

When the top of the switch (A) is pressed, it cuts off power to the motor controller. The motor controller remains in this state until the bottom portion of the switch (B) is pressed. The switch does not turn off all electrical circuits, just the operation of the motor.

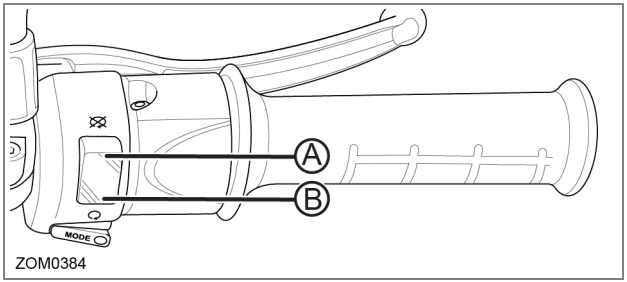

F. Performance Level Mode Button

See “Performance Level Mode Button”, on page 3.19.

G. Hazard Warning Flasher Switch

When the top of the switch is pressed, the turn signals flash to warn other drivers of situations, which include needing to stop or park under emergency conditions. When the bottom of the switch is pressed, the hazard warning circuit will turn off.

H. Turn Signal Switch

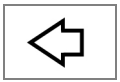

When the turn signal switch is pushed in the left or right position, the corresponding front and rear turn signals flash. When the turn signal switch is ON, the corresponding turn signal indicator on the lower dash illuminates.

Always signal your turns and other maneuvers as required by law. Unlike an automobile, the turn signals must always be canceled manually on the motorcycle. Push in on the switch and it returns to the center, or OFF position.

I. Horn Button

When the key is in the ON position, the horn (A) sounds when the button is pressed. Electric vehicles run quietly; the horn can be used to warn pedestrians or other motorists of your presence.

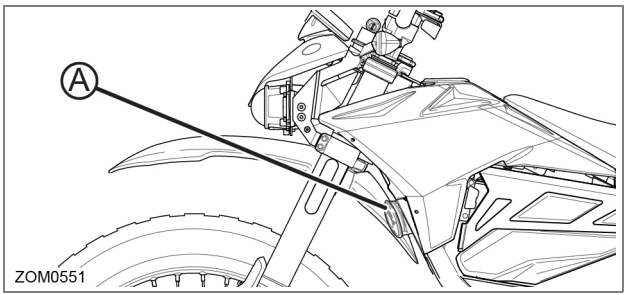

Performance Level Mode Button

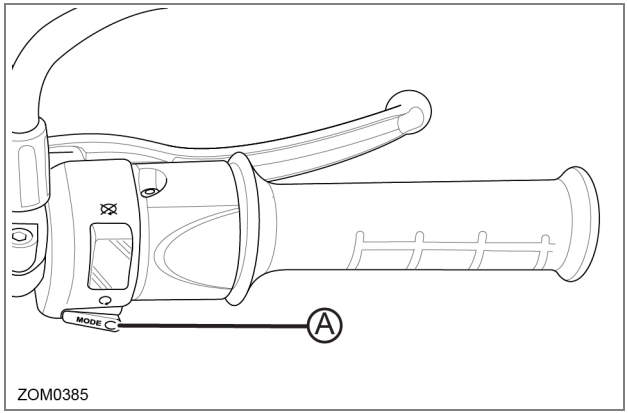

The performance level mode button (A) toggles between **ECO**, **SPORT**, and **CUSTOM** modes. You can switch between performance modes while riding, but the change will not be executed until the throttle is returned to the closed position.

The **ECO** selection reduces the acceleration and top speed of the motorcycle but increases the amount of regeneration when the throttle is released. It is an ideal mode for when you want softer acceleration. This position is also good for newer riders and for extending range.

The **SPORT** selection causes the motorcycle to accelerate at a significantly faster rate but decreases the amount of regeneration when the throttle is released. This position is recommended for advanced riders.

The **CUSTOM** selection has customizable performance settings by using the smartphone application (refer to “Smartphone Application”, on page 3.21).

Those who take advantage of the **ECO** position are likely to see a slight increase in range and experience greater regenerative braking.

Front Brake Lever Adjuster (FXE and FXS only)

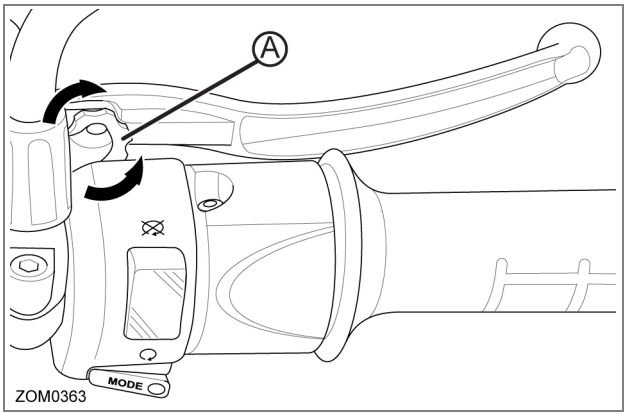

The position of the front brake lever can be adjusted by turning the adjustment knob (A) located on the master cylinder assembly. Turning the knob clockwise or counter-clockwise will adjust the distance between the lever and the throttle control.

Parking Brake Operation (if equipped)

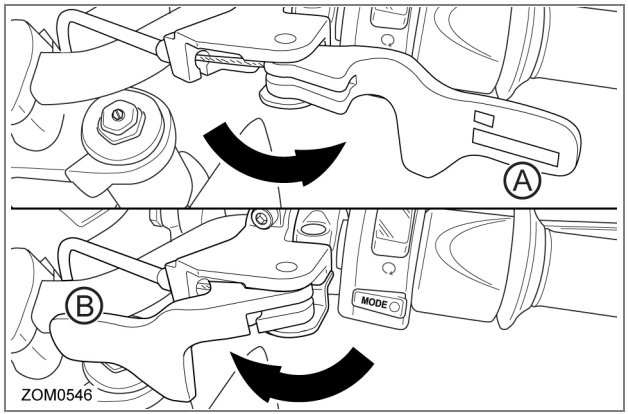

Your Zero Motorcycle may be equipped with a parking brake system. When applied, the parking brake will prevent your motorcycle from rolling forward or backward.

A. **Parking Brake ON**

   Parking brake lever pointing away from the motorcycle.

B. **Parking Brake OFF**

   Parking brake lever pointing toward the center of the motorcycle.

Smartphone Application

You can download a smartphone application that lets you perform the following tasks related to your motorcycle:

- Adjust the CUSTOM mode for performance gains
- Collect and email logs to Zero support staff
- Examine the precise State of Charge (SOC) of your motorcycle
- Examine real time power usage

The Smartphone application is available for free at both the Apple iTunes store and Google Play store. iTunes® is a registered trademark of Apple. Google Play® store is a registered trademark of Google.

Bluetooth® Pairing

The following steps must be taken to properly pair a Bluetooth®-equipped smartphone with your motorcycle.

1. Ensure that the motorcycle is not Armed. The motorcycle must be keyed ON, the kickstand must be in the down position, and the run switch must be in the Stop position.
2. Press and hold the Mode button on the right handlebar for a minimum of 5 seconds until the Bluetooth® symbol on the dash begins to blink, then you may release the Mode button.
3. Your motorcycle will be discoverable with the Bluetooth® ID of ZeroMotorcyclesXXXXX (XXXXX refers to the last 5 digits of the motorcycle's VIN).
   - For iOS devices, go to the Settings application on your smartphone and locate the Bluetooth® menu and pair with your motorcycle
   - For Android devices, go to the Settings tab in your Zero Android application and choose the button with the Bluetooth® symbol

   Note: When the Bluetooth® indicator on the dash display is solid, your motorcycle and smart phone are paired over Bluetooth®.

General Operation

This section describes several items you should examine before operation.

Pre-Ride Inspection

Before operating your Zero Motorcycle, check the following to make sure the motorcycle is secure and intact:

- **Power Pack.** Make sure the charge indicator on the lower dash is indicating a charged power pack. We suggest you recharge before use. Always keep the charger cord with the motorcycle.

  Note: If the motorcycle has been stored for more than 30 days, turn the key switch to the ON position and back to OFF to exit long term storage mode and then allow it to charge for a few hours before use.

- **Drive Belt.** Check the belt tension and condition. Adjust if necessary. See "Drive Belt", on page 6.16.
- **Brakes.** Squeeze the brake lever and press the brake pedal individually while pushing the motorcycle to see if it rolls. You should be able to lock-up the wheels completely by applying the brakes.
- **Throttle.** With the key switch in the OFF position, apply the throttle and release to verify that the throttle is smooth and returns correctly.
- **Tires.** Check both tires for condition and tread depth. Check cold tire pressure frequently. Check for damage and alignment. Maintain correct tire pressure as specified on page 6.15. Replace the tires when the tread height is 0.08 in (2 mm) or less.

WARNING! Under-inflation is a common cause of tire failure and may result in severe tire cracking, tread separation, "blowout," or unexpected loss of motorcycle control causing serious injury or death. Inspect tires regularly to ensure proper inflation levels.

- **Electrical System**. Check for correct function of the headlight, turn signals, and the brake/tail lights.
- **Protective Covers**. Confirm protective covers for power pack diagnostic connector, Quick Charge connector, and on-board charging connector are installed correctly.

Key Switch/Steering Lock Positions

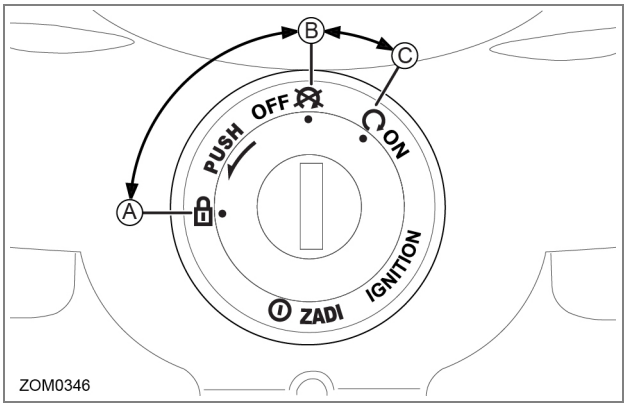

This is a three-position switch that is located on the fork in front of the handlebar. The switch positions are as follows:

- Steering Lock (A)
- OFF (B)
- ON (C)

The key should be removed from the motorcycle when parked to prevent theft. The key can be removed in either the OFF or steering lock position.

Steering Lock

Using the steering lock when parked prevents unauthorized use and helps prevent theft.

To operate the steering lock:

1. Turn the handlebar all the way to the left.
2. With the key in the OFF position, push the key down and turn the key counter-clockwise.
3. Remove the key.

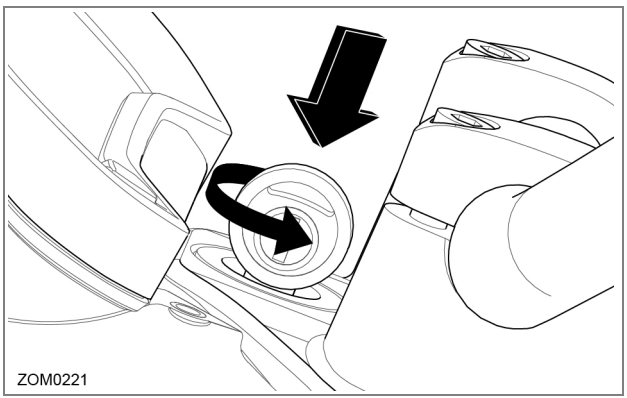

To unlock the steering lock:

1. Install the key and turn clockwise.
2. Remove the key.

OFF Position

This position is used to turn the motorcycle OFF, disabling the electrical system.

ON Position

This position is used for operating the motorcycle. In this position the following sequence occurs:

- Lights turn ON
- Dash display turns ON

Motorcycle Tip-Over Sensor

Your motorcycle has a tip-over sensor that will disable the motorcycle's drive mode in the event it is activated. If your motorcycle's tip-over sensor is activated:

- The motorcycle drive mode will be disabled while tipped-over.
- The motorcycle can't be driven or charged while in a tipped-over state.
- Upright the motorcycle and perform one full key cycle (turn the key to the OFF position, wait for the display to go blank and then turn the key back to the ON position) to reset the sensor.

Note: Altering the factory suspension or changing the location of the MBB (Main Bike Board) may cause either detection of a false tip-over state or disable the detection in the case of an actual tip-over.

Operating Your Motorcycle

This section describes how to safely operate your motorcycle.

Starting

1. Turn the key switch to the ON position.
2. Verify that the charge indicator reads fully charged.
3. Press the motor stop switch to the ON position.
4. With the kickstand up, twist the throttle toward you (counter-clockwise) to increase speed. When the throttle is twisted away from you (clockwise), the speed decreases.

Braking

On the right handlebar is the hand operated brake lever. The brake lever controls the front brake when the lever is squeezed. On the right lower side, next to the foot peg, is the foot operated brake pedal. This pedal controls the rear brake.

When braking, the throttle should be in the closed position.

WARNING! If ABS is disabled or inoperable and you apply the front or rear brake hard enough, it is possible to lock the wheels. This could cause you to lose control of the motorcycle and could lead to serious injury or death. Progressive use of the brakes should bring the motorcycle to a complete stop without locking the wheels. Your Zero Motorcycle is a light- weight performance product and therefore practice is strongly recommended to perfect safe emergency stops.

Stopping Your Motorcycle

To stop your motorcycle:

1. With the throttle in the closed position press the motor stop switch to the OFF position. This switch can also be used in an emergency to shut the motor off.
2. Turn the key switch to the OFF position and remove the key. To prevent theft, the key should be removed anytime the motorcycle is left unattended.
3. Be sure to charge the power pack after each ride.

Temperature Indicator

Zero Motorcycles has developed the most advanced passively air-cooled electric powertrain for your Zero Motorcycle, delivering an unsurpassed level of simplicity, power/energy density, low weight and ease of maintenance. However, this passively air-cooled powertrain cannot be operated indefinitely at high power / high rpm without reaching its thermal limitations. Hence, your Zero Motorcycle has a sophisticated thermal management strategy to ensure the long term performance and durability of its powertrain.

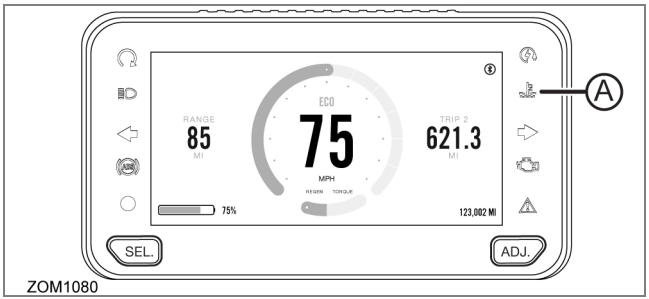

ZOM1080

The yellow temperature indicator light (A) on the dash has two informational stages.

- Stage 1, is presented by flashing this indicator and advises you that the bike is about to enter its thermal strategy. To avoid encountering an enforced power reduction, you can choose to slow down a bit until the indicator stops flashing.
- Stage 2, if temperature continues to build, the indicator light will go solid, letting you know that the thermal strategy is now being applied and that your motorcycle's power will be reduced accordingly. If you encounter the strategy while trying to maintain a high vehicle speed, the effect of the strategy will be that your motorcycle will be gradually slowed down to the point that the top speed of the bike is "sustainable," from a thermal standpoint. If you encounter the strategy due to a different sustained high power event, such as continued powering through a low traction surface, power will simply be reduced to ensure the continued safe operation of your powertrain.

Please note that the lighting of this temperature indicator does not indicate that there's anything malfunctioning with your Zero Motorcycle; it is simply letting you know that the thermal strategy is working. If you do not moderate your speed/power, the bike's system will reduce your speed/power until your Zero can maintain its maximum allowable thermal state; but no harm whatsoever will result from this, since this is exactly how the strategy is meant to function.

ABS (Anti-lock Braking System)

WARNING! ABS prevents the wheels from locking, therefore maximizing the effectiveness of the braking system in emergencies and when riding on slippery surfaces. The potentially shorter braking distances ABS allows under certain conditions are not a substitute for good riding practices.

WARNING! Always ride within the legal speed limit.

WARNING! Carefully ride your motorcycle around corners. If applying the motorcycle's brakes while cornering, the ABS cannot counteract the weight transfer and force. Doing so, can create unsafe riding conditions. Some riding conditions and environments may reduce the effectiveness of the ABS and require stopping distances equivalent to those of a motorcycle without ABS.

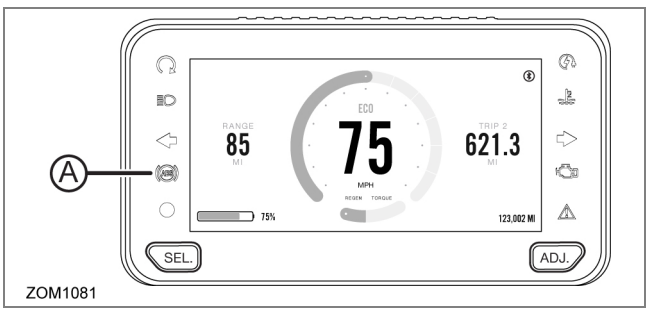

When the motorcycle is stationary and the key is turned to the ON position, it is normal for the ABS warning indicator (A) on the dash to illuminate. The indicator will remain on until the system detects the motorcycle's speed exceeds 3 mph (5 km/h), after which will stay off until the key is turned to the off position and back to the ON position.

Note: The ABS light can illuminate if there is a large difference in wheel speed between the front and rear (wheelies, burnouts, or loose gravel). If this happens, the ABS system will be inactive and can allow the wheels to lock under heavy braking. To reactivate the ABS, bring the motorcycle to a complete stop, then turn the key to the OFF position, wait for approximately 5 seconds, then turn it back to the ON position. The ABS light should extinguish once both wheels reach 3 mph (5 km/h) and be fully functional.

Disabling the ABS

WARNING! When the ABS is disabled, the motorcycle will operate as a non-ABS equipped motorcycle, potentially with increased stopping distance and unpredictable brake control.

To disable the ABS (starting with the motorcycle at rest on a level and stable surface and the ignition key in OFF position):

1. Place kickstand in the down position.
2. Put the Motor Stop Switch in the OFF position.
3. Turn the ignition key to the ON position.
4. Press and hold the **ADJ** button (on dash) and the **MODE** button (on right handlebar) simultaneously. After 4 seconds, the ABS light will begin to flash slowly (approximately every 1.2 seconds). Release both buttons.

   Note: The ABS light will continue to flash (approximately every 1.2 seconds) until the key is cycled off and back to the ON position.

To reactivate the ABS (starting with the motorcycle at rest on a level and stable surface and the ignition key in OFF position):

1. Disconnect external charge cables.
2. Wait for the dash display to turn off completely.
3. Turn the ignition key to the ON position.
4. Resume normal operation.

ABS Warning Indicator

When the motorcycle is stationary and the key turned to the ON position, it is normal for the ABS warning indicator on the dash to illuminate. The indicator will remain on until the system detects the motorcycle's speed exceeds 3 mph (5 km/h), after which it will stay off until the key is cycled off and back to the ON position.

Note: Both the front and rear wheel speed sensors must detect speeds exceeding 3 mph (5 km/h) simultaneously in order for the ABS system and its indicator to operate properly.

If the ABS warning indicator is illuminated outside of its normal operating parameters:

- The ABS has been disabled by the rider.
- The ABS has a malfunction and requires attention and/or service.

WARNING! If the ABS indicator light remains illuminated after your motorcycle exceeds 3 mph (5 km/h), ABS is not active and there is a fault with the ABS system. If an ABS system fault exists, take your motorcycle to an authorized dealer at your earliest convenience to have the ABS system repaired. If there are no dealers in you area, call Zero Motorcycles Customer Service. See "Customer Assistance", on page 9.10

WARNING! The ABS computer compares the relative speed of the front and rear wheels. Using tires other than those specified by Zero Motorcycles can adversely affect the ABS functionality and stopping distance of your motorcycle.

WARNING! If the ABS warning indicator is illuminated when traveling at speeds exceeding 3 mph (5 km/h), the ABS is not functioning. When the ABS system is not functioning, your motorcycle will operate as a non-ABS equipped motorcycle with increased stopping distance and unpredictable brake control.

WARNING! If the front and rear wheel speeds vary in speed significantly, such as during a burnout, wheelie, or off road riding, the ABS indicator will illuminate and disable ABS.

Note: To reactivate the ABS, bring the motorcycle to a complete stop, then turn the key to the OFF position, wait for approximately 5 seconds, then turn it back to the ON position. The ABS light should extinguish once both wheels reach 3 mph (5 km/h) and be fully functional.

Front Suspension Adjustment

A shock has two main actions: compression when the shock gets loaded, and rebound when the shock returns back to full length. Compression damping is the adjustment that determines how fast or slow the shock compresses. Rebound damping is the adjustment that determines how fast or slow the shock rebounds.

Measuring Preload

Obtaining the correct front suspension preload (sag) is critical for proper handling. The spring preload must be set to match the weight of the rider. The spring is preloaded for a 180 lbs (82 kg) rider. This puts the front wheel 1/3 of the way through its vertical travel. Heavier riders require stiffer spring rates. A good approximation of your front springs requirements can be found by measuring the front suspension's sag. This measurement quickly determines if your front springs are approximately correct for your weight. This adjustment is a recommended guideline; personal riding preference may vary from the specifications given.

To Check the Sag Value:

1. Support your motorcycle upright on a stand with the front wheel off the ground.
2. Measure vertically from the bottom of the fork tube to the bottom of the tube's dust seal.
3. Record this measurement (this is the measurement referred to as **M1**).

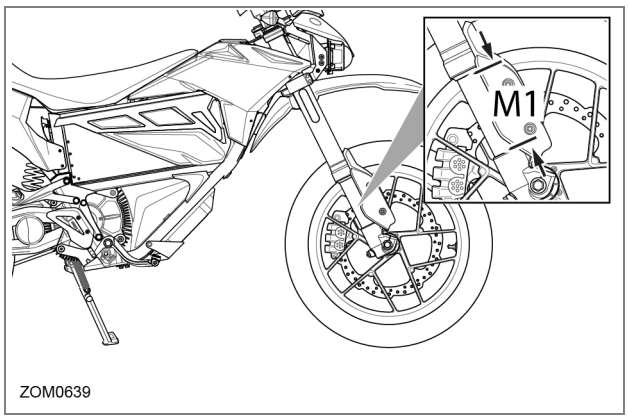

4. Remove the motorcycle from the stand.
5. Wearing your normal riding apparel, sit on the motorcycle.
6. Have an assistant hold the motorcycle upright, your feet should be on both pegs.

7. Bounce the suspension a couple of times.
8. Have a second assistant take a measurement using the same locations as in step 2.
9. Record this measurement (this is the measurement referred to as **M2**).

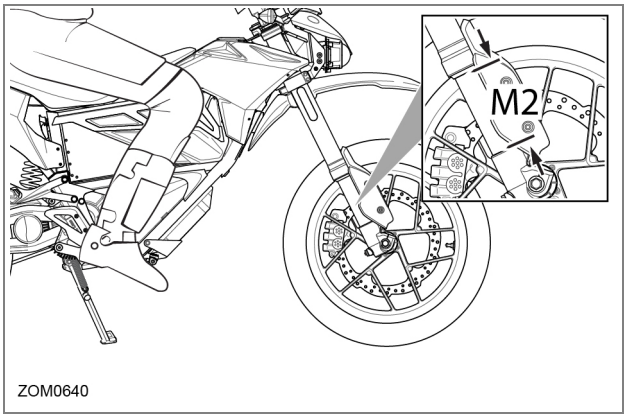

ZOM0640

10. Subtract the second measurement (**M2**) from the first measurement (**M1**).

Example:

MEASUREMENT	OPERATOR	VALUE
M1		6.49 in (165 mm)
M2	-	3.62 in (92 mm)
Sag	=	2.87 in (73 mm)

The total sag is 2.87 in (73 mm). Refer to the chart below for the correct sag. If the sag is not correct, the spring preload should be adjusted.

MODEL	SAG
FX	2.87 in (73 mm)
FXE	2.36 in (60 mm)
FXS	2.36 in (60 mm)

Spring Preload Adjustment

The spring preload is adjusted by turning the 19 mm anodized hex nut (B) located on top of the fork spring.

Note: When adjusting preload, always start from the minimum setting and adjust each fork leg evenly.

- Turning the adjustment nut clockwise increases the spring preload and reduces sag of the front suspension.
- Turning the adjustment nut counter-clockwise decreases the spring preload and increases sag of the front suspension.

Rebound Damping

The rebound damping is adjusted by turning the slotted adjuster screw (A) on the top of both fork legs. Next to the screw are the letters “H” meaning *Hard* (**MAX**, which is for slower rebound) and “S” meaning *Soft* (**MIN**, which is for faster rebound). This determines how quick the fork returns to its extended position after being compressed.

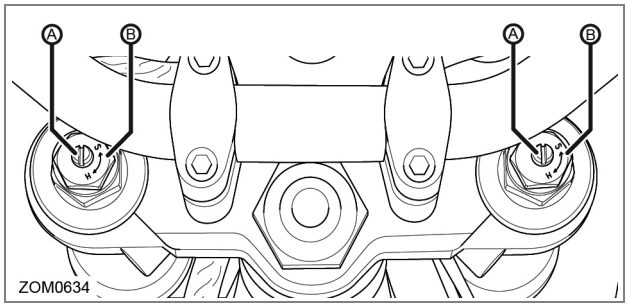

- Turning the rebound adjuster screw clockwise slows the rebound speed down making it better for larger rolling terrain or bumps.
- Turning the rebound adjuster screw counter-clockwise increases the rebound speed making it better for smaller more frequent bumps. Adjust each fork leg equally.

CAUTION: Adjusters should never be forced completely “Soft” or “Hard”; always leave one click of adjustment in either direction.

Compression Damping

The compression damping is adjusted by turning a screw on the bottom of each fork leg. Next to the screw are the letters “H” meaning *Hard* (**MAX**, which is for slower compression) and “S” meaning *Soft* (**MIN**, which is for faster compression).

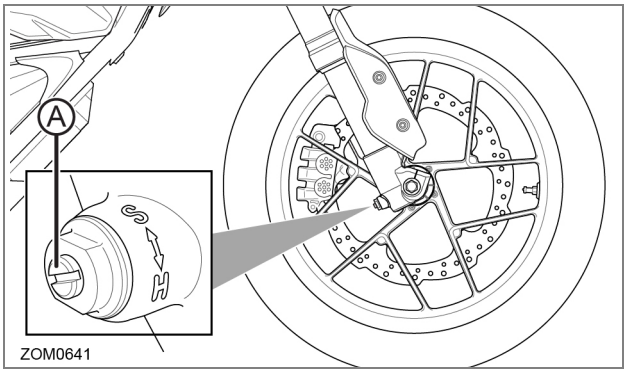

- Turn the adjuster screw (A) clockwise for slower compression.
- To speed up compression, turn the adjuster screw counter-clockwise.

Start with a middle setting and fine tune the compression from there. Proper compression allows the tire to track the ground over consecutive bumps. Compression that is set too slow will pack-up (feel harsh over consecutive bumps), while compression that is set too fast will cause the fork to bottom out harshly. If the fork is bottoming out, turn the adjuster one click at a time until the bottom-out stops. Adjust each fork leg evenly.

Note: Adjusters should never be forced completely “Soft” or “Hard”; always leave one click of adjustment in either direction.

Factory Supplied Front Suspension Settings

The following information will allow you to adjust the front suspension back to the factory settings the motorcycle was originally supplied with.

FX Model

ADJUSTMENT	SETTING
Front Fork Compression	5 clicks counter-clockwise from maximum (**H**) position.
Front Fork Rebound	9 clicks counter-clockwise from maximum (**H**) position.
Front Fork Preload	7.5 turns clockwise from the full out position.

FXE and FXS Models

ADJUSTMENT	SETTING
Front Fork Compression	7 clicks counter-clockwise from maximum (**H**) position.
Front Fork Rebound	12 clicks counter-clockwise from maximum (**H**) position.
Front Fork Preload	5.5 turns clockwise from the full out position.

Rear Shock Adjustment

Measuring Preload

Obtaining the correct rear spring preload (sag) is critical for proper handling. The spring preload must be set to match the weight of the rider. The spring is preloaded for a 180 lb (82 kg) rider. This puts the rear tire 1/3 of the way through its vertical travel. Heavier riders and motorcycles carrying additional cargo or accessories require stiffer spring rates. A good approximation of your rear spring requirements can be found by measuring the rear suspension's sag. This measurement quickly determines if your rear spring is approximately correct for your weight. This adjustment is a recommended guideline; personal riding preference may vary from the specifications given.

To Check the Sag Value:

1. Support your motorcycle on a stand with the rear wheel off the ground.
2. Measure vertically from the rear axle to the rear fender. Mark this spot as it is used for other measurements.
3. Record this measurement (this is the measurement referred to as **M1**).

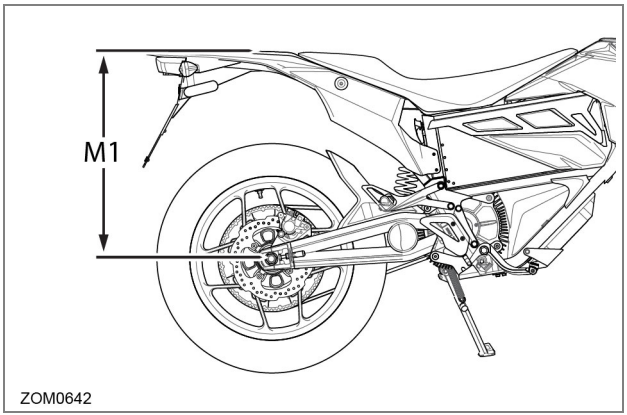

4. Remove the motorcycle from the stand.
5. Wearing your normal riding apparel, sit on the motorcycle.
6. Have an assistant hold the motorcycle up, your feet should be on both pegs.

7. Bounce the suspension a couple of times.
8. Have a second assistant take a measurement using the same locations as in step 2.
9. Record this measurement (this is the measurement referred to as **M2**).

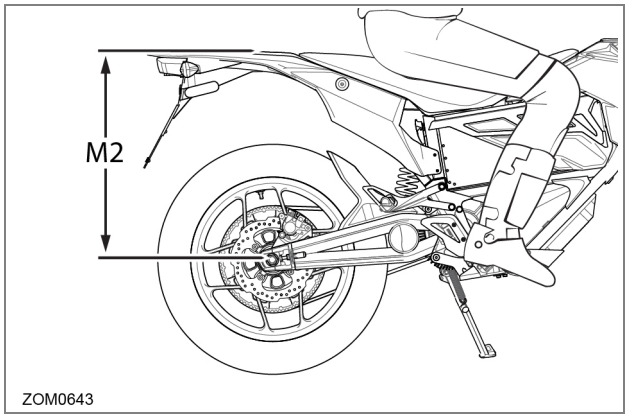

10. Subtract the second measurement (**M2**) from the first measurement (**M1**).

Example:

MEASUREMENT	OPERATOR	VALUE
M1		24.02 in (610 mm)
M2	-	20.79 in (528 mm)
Sag	=	3.22 in (82 mm)

The total sag is 1.97 in (50 mm). Refer to the chart below for the correct sag. If the sag is not correct, the spring preload should be adjusted.

MODEL	SAG
FX, FXE & FXS	3.22 in (82 mm)

Spring Preload Adjustment

1. Clean any dirt or debris from the slots of the shock adjusting collar (A).
2. Using an adjusting wrench, turn the adjusting collar (A).
3. For measurements less than the specified value, decrease the preload on the spring by turning the adjustment collar counter-clockwise on the shock. If more than the specified value, increase the preload on the spring by turning the adjustment collar clockwise on the shock.

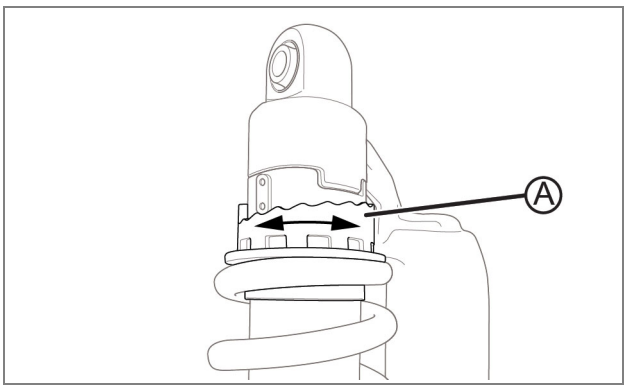

Rebound Adjustment

The rebound adjuster knob (A) is at the bottom of the shock. Printed on the knob is “H” meaning *Hard* (**MAX**, which is for slower rebound) and “S” meaning *Soft* (**MIN**, which is for faster rebound). The ride quality adjustment knob controls the hardness or softness the ride quality of your motorcycle. Turning the knob clockwise, or H direction, is good for big impacts.

Turning the knob counter-clockwise, or S direction, is good for smaller and more frequent impacts.

Note: Adjusters should never be forced completely “Soft” or “Hard”; always leave one click of adjustment in either direction.

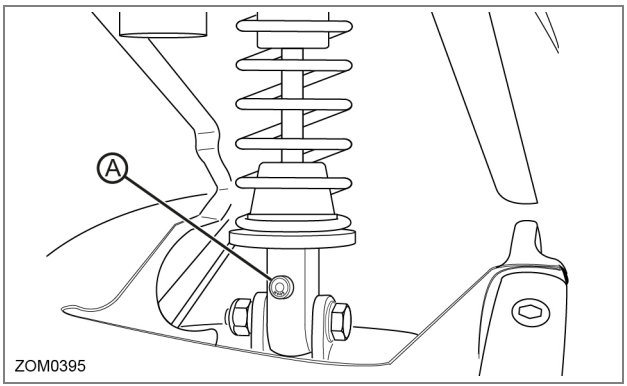

Compression Adjustment

The compression adjustment knob is at the top of the shock. Printed on the knob is “H” meaning *Hard* (**MAX**, which is for slower compression) and “S” meaning *Soft* (**MIN**, which is for faster compression). Turn the adjuster clockwise for a harder ride (slower compression). For a softer ride (faster compression), turn the adjuster counter-clockwise. Start with a middle setting and fine tune the compression from there. Proper compression allows the tire to track the ground over consecutive bumps. Compression that is set too hard will pack-up (feel harsh over consecutive bumps), while compression that is set too soft causes the shock to bottom out harshly. If the shock is bottoming out, turn the adjuster one click at a time until the bottom out stops.

Note: Adjusters should never be forced completely “Soft” or “Hard”; always leave one click of adjustment in either direction.

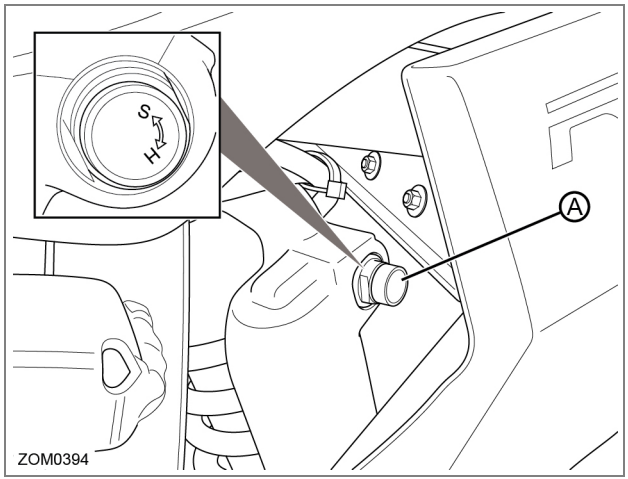

Factory Supplied Rear Suspension Settings

The following information will allow you to adjust the rear suspension back to the factory settings the motorcycle was originally supplied with.

FX, FXE & FXS Models

ADJUSTMENT	SETTING
Rear Shock Compression	9 clicks counter-clockwise from maximum (**H**) position.
Rear Shock Rebound	12 clicks counter-clockwise from maximum (**H**) position.
Rear Shock Spring Preload	5th position from minimum unloaded position.

Power Pack

The battery is located within the power pack and requires no special break in period.

The Zero Z-Force® Power Pack™ leverages proven battery cell chemistry, configuration, and enhanced reliability. Not only does the Z-Force® technology enable you to go longer distances (range varies depending on riding type and conditions), it is also designed to last the life of the motorcycle. The integrated on-board charger minimizes charge time and can work in parallel with Zero's quick charge accessories to cut charge times by as much as 75%.

The charging time will remain the same if the on-board charger is connected to a 120 V AC or a 240 V AC supply.

The normal recharging time of the power pack to a 100% state of charge is usually less than 6 hours for the ZF3.6 and 10 hours for the ZF7.2 in mild ambient temperatures. Out of the normal temperature range, charging and run-time times will vary. The power pack should not be used outside of the range of -4°F to 140°F (-20°C to 60°C); the Battery Management System (BMS) turns off the power controller outside of this range.

Note: The power pack will not charge at temperatures below 32°F (0°C) or above 122°F (50°C).

The Zero power packs have been designed to operate under normal temperatures and environmental conditions. However, the lithium-ion batteries used in the power packs, age based on usage cycles as well as calendar time. Aging can be accelerated by prolonged storage of the power pack at a high state of charge, especially at high temperatures. In order to maximize the life of your power pack(s) and support the worry free operation of your motorcycle, Zero Motorcycles has established a set of guidelines for proper charging and operation. See "When To Charge Your Z-Force® Power Pack™", on page 1.3.

CAUTION: Failure to follow the charging guidelines could damage the power pack and void your power pack warranty.

Once recharged, disconnect from the AC power source. Leaving your motorcycle unplugged between charges will maximize the long term health of the power pack.

While unplugged with the key in the OFF position, the motorcycle's electronics will consume a very small amount of power and a fully charged power pack will drain extremely slowly.

For guidelines on how to care for the power pack when the motorcycle is not being used for an extended period of time (30 days or more) or if the motorcycle is being stored long term, see "Parking and Long Term Storage", on page 6.33.

Battery Management System (BMS)

Every power pack contains a Battery Management System (BMS) which monitors the condition of the cells, and optimizes the charging process to provide the highest performance, longest range, and longest life for the power pack.

The BMS safeguards the power pack by means of safety interlocks. These interlocks turn off or control certain operations that could damage the power pack. See “Safety Interlocks”, on page 7.16 for more information.

The BMS also monitors the power pack for a host of predefined conditions, and then takes actions according to those conditions. See, “Battery Management System”, on page 7.9 and “Cold and Hot Weather Considerations”, on page 7.15 for further information.

The BMS is sealed inside the power pack. As a rider, you don’t need to think much about the BMS - it just silently does its job as you charge, ride, and store your motorcycle.

Modular Power Pack System - Removal and Installation (if equipped)

Dependent upon the specification of the motorcycle when it was originally ordered from the factory, some Zero FX and FXS motorcycles feature a modular power pack system that allows a power pack to be quickly changed.

The motorcycle may have either a single power pack or two power packs installed.This allows the rider to charge one power pack while using another, or extend the range of the motorcycle with two power packs installed.

Note: Additional power pack modules can be purchased from Zero Motorcycles.

Removing the power pack(s)

1. Remove the key from the key switch and safely support the motorcycle.
2. Grasp the top of the key lock latch (see arrows) and pull downward to unlock the power pack rail.
3. Pull the power pack rail (A) away from the motorcycle.

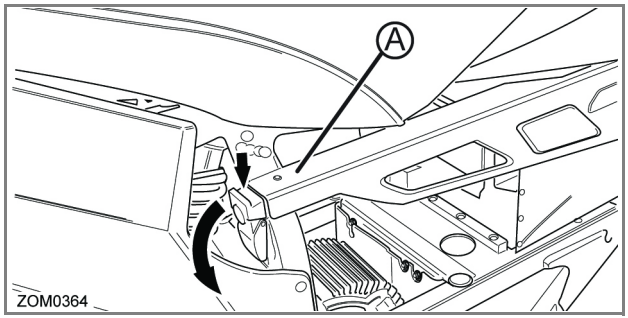

4. Using a firm grip, slide the power pack out of the frame.

   Note: If two power packs are installed, the pack closest to the rear wheel must be removed first.

   Note: If necessary, assist removal by also pushing power pack from the opposite side of the motorcycle.

   Note: Each power pack weighs 42 lbs (19 kg).

5. Remove the second power pack if required.

WARNING! Opening of the power pack is for trained Zero Motorcycles technicians. Please be aware that incorrect handling of a Zero power pack can be dangerous. **DO NOT OPEN!**

Installing the power pack(s)

Note: If you are installing and operating the motorcycle using a single power pack, the power pack must be installed in the position closest to the front of the motorcycle.

1. Slide the power pack into the frame.
2. Install the power pack connector plug if only a single power pack is installed. Failure to install the connector plug will prevent the motorcycle from operating.

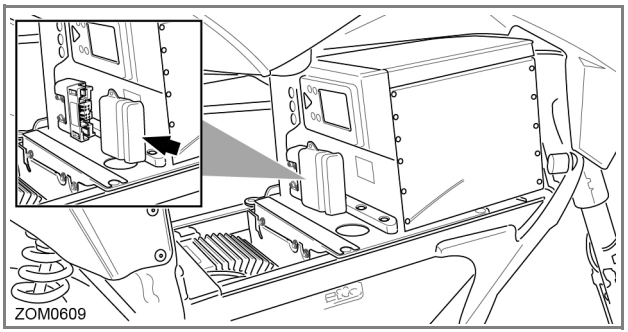

3. If you are installing a second power pack, remove the power pack connector plug from the first power pack and securely store it using the strap located under the seat.

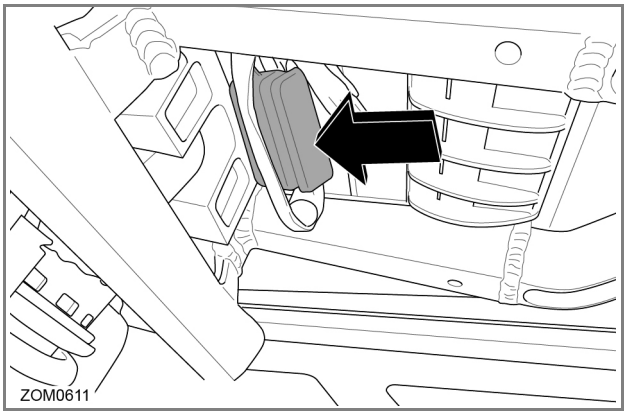

4. Slide the second power pack into position on the frame and make sure the power pack connectors correctly engage.
5. Re-attach the power pack rail.
6. Push the key lock upward to secure the rail.
7. Use the key to lock the rail.
8. Turn the key switch to the ON position and check that the motorcycle has power.

CAUTION: Do not operate the motorcycle without the power pack rail or rail fastener in place.

On-Board Power Pack Charger

Charge your motorcycle's power pack according to guidelines under "When To Charge Your Z-Force® Power Pack™", on page 1.3. You should only use the supplied cable as it is designed for use with your motorcycle's electrical components.

CAUTION: Only charge the Zero power pack with the Zero charger or approved Zero accessory chargers. The on-board charger is located in the front under the fairings.

When charging the motorcycle's power pack, the charger can be left connected and ON, even after the power pack is fully charged. But unplugging your motorcycle after it is charged will maximize long term power pack health. If left connected, there are several possible charge cases that can occur:

- When connected to the charger, the power pack will receive a full charge. Once fully charged, the charger will cycle between 90% and 100% state of charge. When the state of charge gets close to 90%, the charger will recharge to 100% and repeat. When fully charged, the charging indicator will illuminate green - not flashing.

  Should the charger not read that the power pack is full, it continues to attempt to fully charge the power pack. In this event the charging indicator may not illuminate green; however, the power pack may be fully charged. To ensure that the power pack is charged, check the charge indicator on the dash display prior to riding.

- If the power pack terminates the charge before the charger reaches the state previously mentioned, then the charger continues to cycle and tops off the power pack until the power pack is disconnected from the charger, or the charger reaches the complete state previously noted.

- The Battery Management System countdown timer activates long term storage mode. Long term storage mode is triggered if the key switch has not been in the ON position within the last 30 days. When activated, the Battery Management System will discharge the power pack to 60% state of charge. The power pack will then continue to discharge approximately 1% per day. When the state of charge reaches 30%, the charger will recharge to 60% and repeat.

  Note: To exit long term storage mode and be able to charge the motorcycle to 100% state of charge, the key switch must be turned to the ON position and back to OFF to reset the Battery Management System countdown timer.

CAUTION: Leaving the motorcycle connected to the charger is not recommended for long term storage as it prevents the motorcycle from going into "hibernate" mode and may also decrease the life of your power pack(s). See "Parking and Long Term Storage", on page 6.33.

Charging the Power Pack

WARNING! Always charge the Zero power pack in a location that is well-ventilated and away from combustible materials. If charging your Zero Motorcycle outdoors, avoid charging in the rain.

WARNING! Only charge the Zero power pack with the Zero charger or approved Zero accessory chargers. Using unapproved chargers or accessories may lead to cell damage or battery failure.

If the power pack's internal temperature is below 32°F (0°C) or above 122°F (50°C), it will not accept a charge until the temperature is between these limits. If the power pack has recently been rapidly discharged from aggressive riding, it may internally be above 122°F (50°C), even if the ambient temperature is lower.

If you experience a power pack that will not take a charge, you should ensure the internal temperature is below 122°F (50°C). If the power pack has recently been operating near maximum output and/or in hot conditions it may not take a charge, the power pack should cool off and begin taking a charge in around 30 minutes or less.

The maximum charging temperature cutoff is a power pack longevity feature. Charging at higher temperatures can shorten the life of the power pack.

To charge using the standard on-board charging equipment:

1. Plug the supplied power cord (A) into the on-board charger connector. Always keep the power cord with the motorcycle.

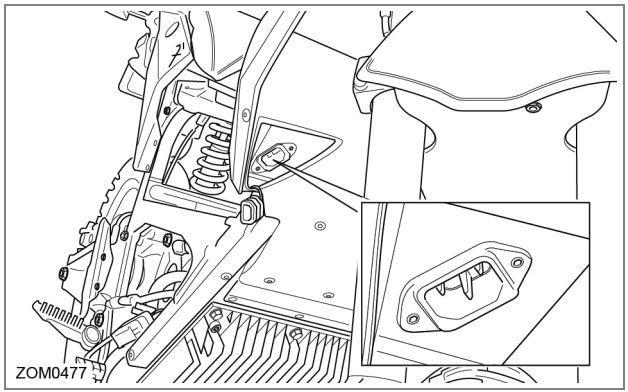

2. Always connect the charger to a GROUNDED outlet. When using an extension cord, avoid excessive voltage drops by using a grounded, 3-wire, 12-AWG cord no longer than 25 ft (7.6 m). The charger can be used on 120 V AC or 240 V AC current. The voltage does not change the amount of time that the motorcycle takes to charge.

   Note: AVOID connecting the Zero charger and another device to a single 120 V AC 15A/20A circuit, as it may become overloaded. Zero chargers draw as much as 14 amps from the 120 V AC circuit when charging.

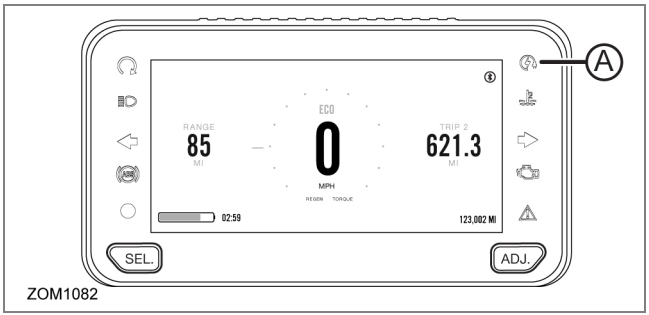

ZOM1082

3. The charging icon (A) flashes as the battery is being charged. Once charging is complete, the icon stays illuminated.
4. The estimated remaining charging time to charge the power pack to 100% is shown next to the SoC indicator.
5. For the approximate charging times based on the charging equipment installed on your Zero Motorcycle, see “Technical Specifications”, on page 8.1.

Note: The charging icon is solid green when fully charged and plugged into the charger.

Quick Charging (Off-Board Accessory Charger)

The “scalable” quick charging feature allows up to four supplemental accessory chargers (in addition to the existing integrated charger) to be connected to the motorcycle. Use of supplemental accessory chargers can reduce the charging time by up to 75%.

Note: The time for charging the motorcycle using quick charging will vary with the number of chargers used.

The accessory charging connector is located above the motor. For more information on how to connect additional chargers, refer to the quick charger’s owner’s manual.

WARNING: Only use Zero approved accessory chargers. Damage, malfunctions, or performance problems caused by the installation or use of any charger not sold or approved by Zero will void the warranty of your Zero Motorcycle.

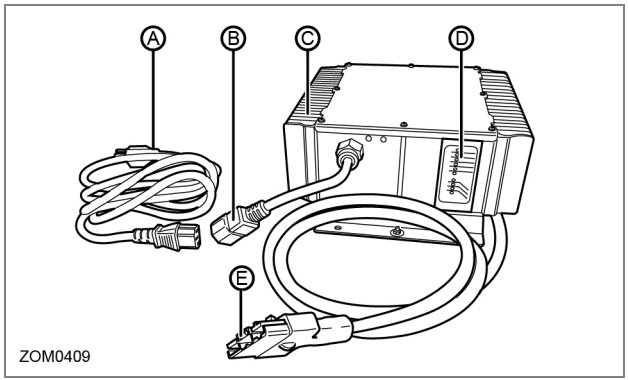

A. AC Power Cord
B. AC Power Cord Connection
C. Power Pack Charger
D. Charger LED Indicators
E. Connector (to motorcycle)

Using the Quick Charger

To charge using a Quick Charger:

Note: If you connect the on-board charger (see "Charging the Power Pack", on page 5.6) prior to connecting the Quick Charger, it will start charging without the ON and OFF key cycle (in step 1 and number 7)

1. Ensure that the key switch is in the ON position.
2. Ensure that the Quick Charger is unplugged and unpowered.
3. Remove the 5 fasteners securing the flexible protective cover and remove cover.

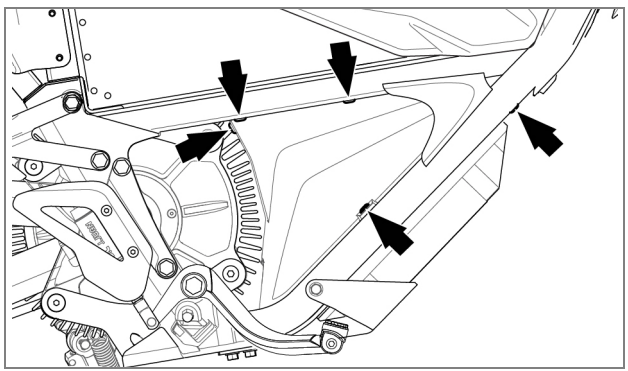

4. Connect the Quick charger to the power pack connector (A).

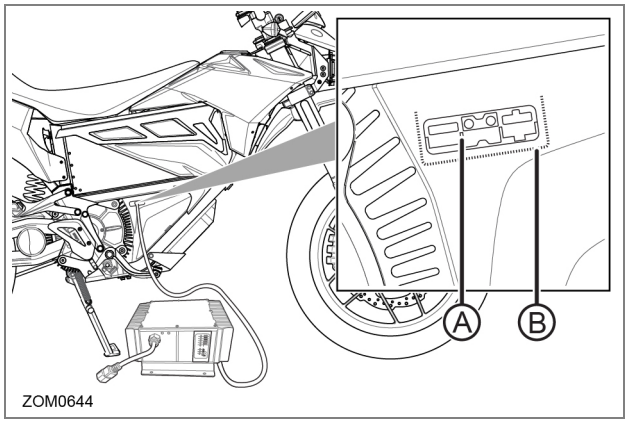

5. Plug in the AC Power Cord to an AC power outlet. Always connect the charger to a GROUNDED outlet. When using an extension cord, avoid excessive voltage drops by using a grounded, 3-wire, 12-AWG cord no longer than 25 ft (7.6 m). The charger can be used on 120 V AC or 240 V AC current. The voltage does not change the amount of time that the motorcycle takes to charge.
6. Connect the AC Power Cord to the AC Power Cord Connection on the off-board accessory charger. See "Quick Charging (Off-Board Accessory Charger)", on page 5.8.

7. The green charge LED on the dash will begin blinking steadily to indicate charge flow. If the key switch was turned to the ON position, now turn it to the OFF position.
8. When the green charge LED becomes solid or the SOC reads 100%, the battery system is fully charged, disconnect the charger. When the power pack is fully charged, disconnect the chargers and reinstall the protective cover.

Note: If Quick Charger will be used again, cut access flap (see dashed line (B)) in flexible protective cover before re-installation. Do not cut across the top of the flap. Do not completely remove flap.

Quick Charger LED Indicators

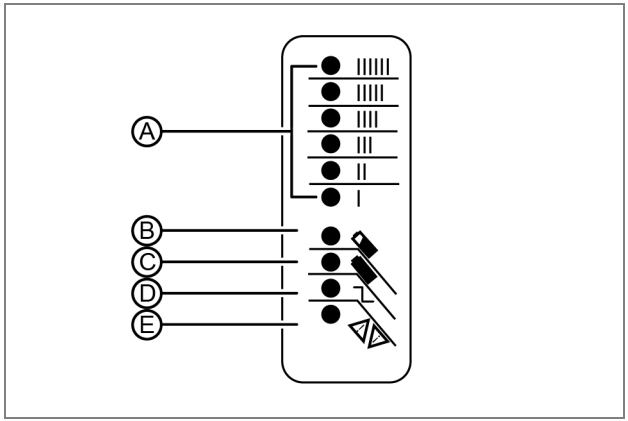

A. Ammeter

The Ammeter LED is an amber indicator that indicates the amount of current output and should gradually ramp down from “IIIIII” to “I”.

B. 80% Charge

The 80% Charge LED is an amber indicator. If it is on solid, the bulk charge phase is complete, 80% charged. Charger is now in absorption phase. If the indicator is flashing, there are two issues that can cause this to occur:

- The charger and BMS are balancing.
- The BMS is cutting off the charge because one or more cells have reached maximum voltage.

C. 100% Charge

The 100% Charge LED is a green indicator. If it is on solid, the charging is complete and the charger will enter maintenance mode. If it is flashing, the absorption phase is complete and the charger is in finish phase.

D. AC ON

The AC ON LED is an amber indicator. If it is on solid, the AC power is good. If it is flashing, the AC voltage is low. Check for proper voltage, and if an extension cord is being used, verify that it is the correct length. Maximum length is 25 ft. (7.6 m) 12 AWG.

E. Fault

The Fault LED is a red indicator which indicates there is a charger error. If it is flashing, reset the charger and see “Troubleshooting”, on page 7.1.

Public Charging Stations

There are more public charging stations coming online every day and there may be some in your area. You can charge from a Level 1 public charging station with your supplied charge cord or from a Level 2 charging station with the optional J1772 Zero Motorcycles charging adapter accessory (Zero PN: 10-03267). These charging stations are often available at a variety of locations including shopping centers, city parking lots, airports, hotels, government offices, and other businesses. We recommend that you search the internet for locations in your area. For example, search for “charging stations.”

Note: Use of a Level 2 charging adapter accessory cord (Zero PN: 10-03267) doesn’t improve charge times unless a supplemental accessory charger is also used.

Add On Electrical Equipment

WARNING! Do not add electrical components to your motorcycle unless they have been approved by Zero. Some add-on electrical components can damage your motorcycle, prevent other components from working as they should, and/or dramatically reduce the range and/or life expectancy of the power pack.

Owner's Responsibilities

Listed below are the responsibilities afforded to the owner:

- This Owner's Manual should be considered a permanent part of this motorcycle and should remain with it even if the motorcycle is subsequently sold.
- Perform routine care and maintenance of your electric motorcycle as detailed in this Owner's Manual.
- Use only Zero approved parts and Zero Motorcycles accessories.
- The operator is responsible for learning and obeying all country, federal, state, and local laws governing the operations of an electric motorcycle.
- Always wear a regionally approved helmet, goggles, appropriate boots, and all other appropriate safety equipment when operating an electric motorcycle.

Parts/Maintenance Items

The proper replacement parts, fluids, and lubricants to use are listed in the table below.

PART	NUMBER
Headlight Bulb	H3 (55 watt)
Turn Signal Light Bulb (amber)	RY10W (10 watt)
Brake/Tail Lights Bulb	1157 (5 watt)
Front Running Light Bulb	W3W (3 watt)
Brake Fluid	DOT 4

Service History

Follow the maintenance schedules on page 6.2. After each scheduled service or routine is performed, record the information in the Maintenance Record chapter of this book.

Scheduled Maintenance

The required maintenance schedule that follows, specifies how often you should have your Zero Motorcycle serviced and what items need attention. It is essential to have your Zero Motorcycle serviced as scheduled to maintain safe, dependable performance.

The service intervals in this maintenance schedule are based on average riding conditions. Some items will need more frequent service if you ride in unusually wet or dusty areas. Consult your dealer for recommendations applicable to your individual needs and use. It is recommended that you have your Zero Motorcycle serviced every 12 months by a Zero Dealer regardless of the distance ridden.

Maintenance Schedule

The scheduled maintenance must be performed in accordance with this chart to keep the Zero Motorcycle in top running condition. The initial maintenance is vitally important and must not be neglected. Where time and mileage are listed, follow the interval that occurs first.

#	ITEM	ROUTINE	EVERY RIDE	INITIAL	INITIAL	ODOMETER MILEAGE READING			
				600 mi (1K km) or 1 month	4K mi (7K km) or 6 months	8K mi (13K km) or 12 months	12K mi (19K km) or 18 months	16K mi (25K km) or 24 months	20K mi (31K km) or 30 months
1	Brake Fluid (front and rear)	Check brake fluid level. Add brake fluid as necessary.	√	√	√	√	√	√	√
		Replace brake fluid (every 12 months).				√		√	
2	Front Brake	Check operation, and for fluid leakage. Replace brake pads if necessary.	√	√	√	√	√	√	√
3	Rear Brake	Check operation, and for fluid leakage. Replace brake pads if necessary.	√	√	√	√	√	√	√
4	Wheels	Check run-out, and for damage. Replace if necessary.			√	√	√	√	√
5	Tires	- Check tread depth, and for damage. Replace if necessary. - Check air pressure. See page 6.15. Correct if necessary.	√		√	√	√	√	√
6	Wheel Bearings	Check bearings for smooth operation. Replace if necessary.		√	√	√	√	√	√

#	ITEM	ROUTINE	EVERY RIDE	INITIAL	INITIAL	ODOMETER MILEAGE READING			
				600 mi (1K km) or 1 month	4K mi (7K km) or 6 months	8K mi (13K km) or 12 months	12K mi (19K km) or 18 months	16K mi (25K km) or 24 months	20K mi (31K km) or 30 months
7	Drive Chain	- Check chain slack/alignment and condition. - Adjust and lubricate chain with chain lubricant thoroughly. - Replace worn chain.	√	Every 600 mi (1,000 km) and after washing the motorcycle or riding in the rain.					
8	Drive Belt	- Check belt tension. - Inspect belt for signs of damage or cracking. Replace belt: - Every 24K mi (37K km).	√	√					
9	Steering Bearings	- Check for looseness. - Repack with all-purpose grease.		√	√	√	√	Repack	√
10	Chassis Fasteners	- Check all chassis fasteners and fittings. - Tighten and adjust as needed.			√	√	√	√	√
11	Front Brake Lever Pivot Shaft	- Apply silicon grease lightly. - Check operation and for oil leakage. - Service/rebuild if necessary.		√	√	√	√	√	√
12	Front Fork	- Check operation and for oil leakage. - Service/rebuild if necessary.	√		√	√	√	√	√

#	ITEM	ROUTINE	EVERY RIDE	INITIAL	INITIAL	ODOMETER MILEAGE READING			
				600 mi (1K km) or 1 month	4K mi (7K km) or 6 months	8K mi (13K km) or 12 months	12K mi (19K km) or 18 months	16K mi (25K km) or 24 months	20K mi (31K km) or 30 months
13	Rear Shock Absorber Assembly	- Check operation and for oil leakage. Replace if necessary	√		√	√	√	√	√
14	Throttle Grip	- Check operation and free play.	√		√	√	√	√	√
15	Kickstand Pivots	- Check operation. - Apply silicon grease lightly.			√	√	√	√	√
16	Kickstand Switch	- Check operation and replace if necessary.		√	√	√	√	√	√
17	Drive Motor	Commissioning and timing.		√		√		√	

Note: From 24,000 mi (37,000 km) or 36 months, repeat the maintenance intervals starting from 8,000 mi (13,000 km) or 12 months.

Component Fasteners

Periodically check and tighten the following fasteners on your motorcycle.

Torque Table

LOCATION	ITEM	TORQUE	NOTES
A	Front axle	40 lb·ft (54 Nm)	Use LOCTITE® anti-seize lubricant (or equivalent)
B	Handlebar clamp mount bolts	18 lb·ft (24 Nm)	-
C	Main pivot bolt/nut (swingarm)	75 lb·ft (102 Nm)	Use LOCTITE® 242® (or equivalent)
D	Shock mount bolts (upper/lower)	52 lb·ft (70.5 Nm) / 38 lb·ft (51.5 Nm)	-
E	Rear brake pad pin	6 lb·ft (8 Nm)	Use LOCTITE® 242® (or equivalent)
F	Motor mount bolts (rear)	20 lb·ft (27 Nm)	-
G	Motor mount bolts (front)	20 lb·ft (27 Nm)	-
H	Triple tree pinch bolts	16 lb·ft (22 Nm)	-
I	Front axle pinch bolts	16 lb·ft (21.7 Nm)	Use LOCTITE® anti-seize lubricant (or equivalent)
J	Rear axle slider retaining bolts	15 lb·ft (26 Nm)	-
K	Rear axle end bolt	75 lb·ft (102 Nm)	Use LOCTITE® 242® (or equivalent)
L	Front caliper mount bolts	19 lb·ft (26 Nm)	Use LOCTITE® 242® (or equivalent)

Left Side Of Motorcycle

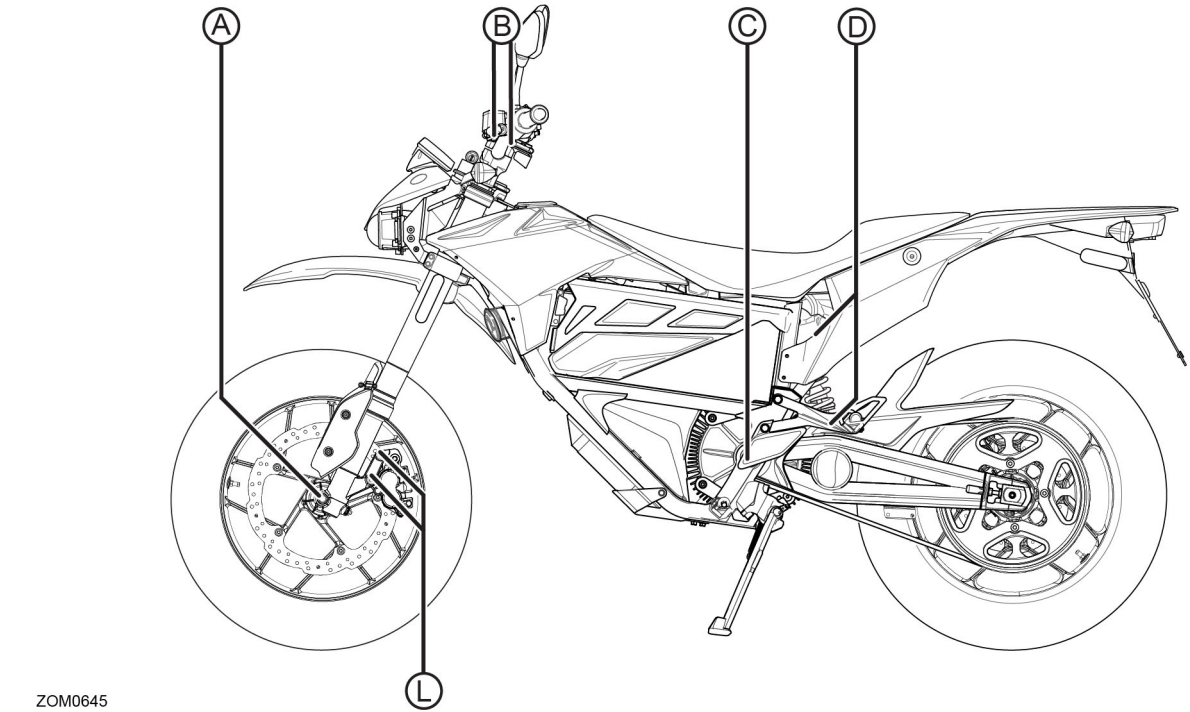

ZOM0645

Refer to Torque table on page 6.6.

Right Side Of Motorcycle

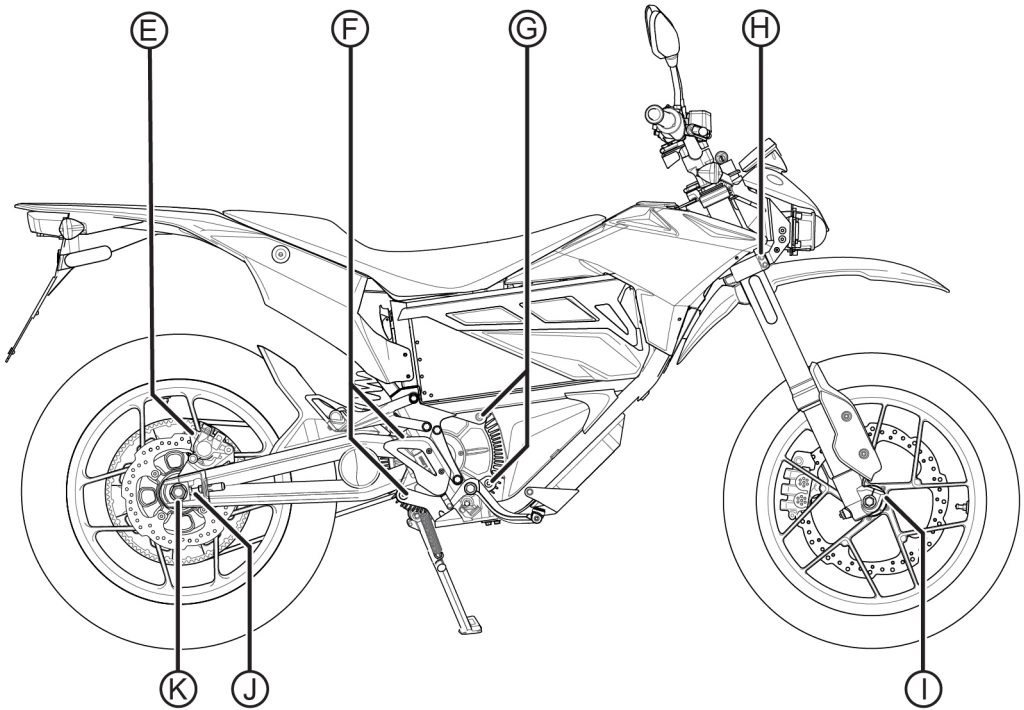

ZOM0646

Refer to Torque table on page 6.6.

Power Pack

CAUTION: Never store your motorcycle at a state of charge less than 30%. Leaving the power pack discharged below 30% for a long period of time could damage the power pack and void the warranty.

Charge your motorcycle's power pack according to guidelines under "When To Charge Your Z-Force® Power Pack™", on page 1.3. Once charged, disconnect from the AC power source. Leaving your motorcycle unplugged between charges will maximize the long term health of the power pack.

If stored long term, check the state of charge at least monthly and charge it back up to 60% if it has dropped below 30%.

1. The power pack is a lithium ion power system. While it does require charging, it does not require maintenance.
2. The power pack should be kept away from extremes of temperature. To maximize the life of the power pack, avoid leaving it parked in direct sunlight or parked/stored in an area with an ambient temperature below -4°F (-20°C) or above 95°F (35°C) for an extended period.
3. Only an authorized service agent is qualified to have access to the power pack's interior.
4. Dispose of the power pack according to local laws and regulations. It is encouraged that the power pack be recycled rather than disposed of in landfills.
5. Please contact Zero at support@zeromotorcycles.com or locate a recycling center in your area.

Brakes

This section describes how to maintain the brake system of your Zero FX/FXE/FXS motorcycle. It covers the ABS (Anti-lock Brake System), brake pad examples (specific brake pads for front and rear are shown), and maintaining brake fluid levels and types for front and rear systems.

Bleeding the Brake System

Your motorcycle is equipped with ABS. You can only bleed the brake system if fluid still remains in the HCU (Hydraulic Control Unit).

Bleeding a dry HCU requires an evacuation and fluid fill machine.

Brake Fluid Level Inspection

CAUTION: Do not spill brake fluid on painted surfaces; the finish could be damaged. Spilling brake fluid on the body panels will cause them to crack.

Always place a shop towel under the master cylinder reservoir prior to removing cover/cap.

Low fluid levels may indicate worn brake pads or a leak in the hydraulic system. Inspect the brake pads for wear and/or the hydraulic system for leaks. Use only new DOT 4 brake fluid from a sealed container.

Front Brake Fluid Reservoir

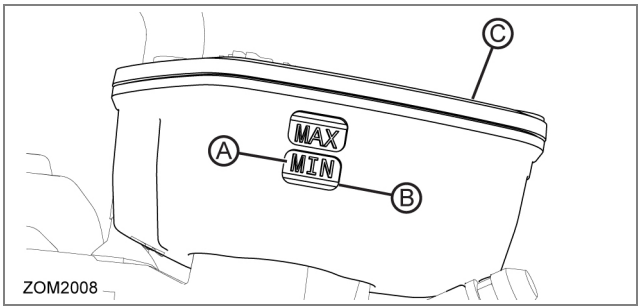

Inspect the level of the front brake fluid through the sight glass (A). If the fluid level is visibly below the low level indicator (B), brake fluid must be added. Clean any dirt or debris from the cover (C) before opening the reservoir.

Note: The motorcycle should be in an upright position prior to checking fluid level.

1. Remove the two Phillips screws securing the cover onto the reservoir.
2. Add new DOT 4 brake fluid.
3. Inspect the cover seal, ensuring that it is free of any wear or damage and that it is positioned correctly.
4. Install the cover and tighten the Phillips screws. Torque to 5 lb in (0.56 Nm).

Rear Brake Fluid Reservoir

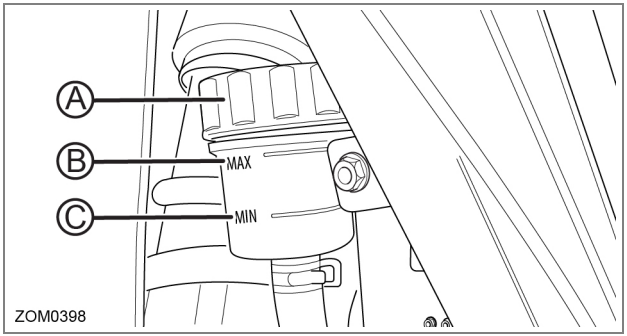

Inspect the level of the rear brake fluid by inspecting the level through the reservoir housing. The reservoir housing is located inboard on the frame behind the heel guard. If the fluid level is visibly below the low minimum **MIN** indicator (C), brake fluid must be added until level reaches the upper **MAX** indicator (B). Do not overfill.

Note: The motorcycle should be in an upright position prior to checking fluid level.

Clean any dirt or debris from the cap and reservoir opening (A) before opening the reservoir. Unscrew the cap and add new DOT 4 brake fluid. Inspect the cap seal ensuring that it is free of any wear or damage then reinstall the cap.

Brake Pad Inspection

The brake pads must be inspected when specified in the maintenance schedule, see page 6.2. Visually inspect the brakes by looking at the remaining brake pad material through the sides of the brake caliper.

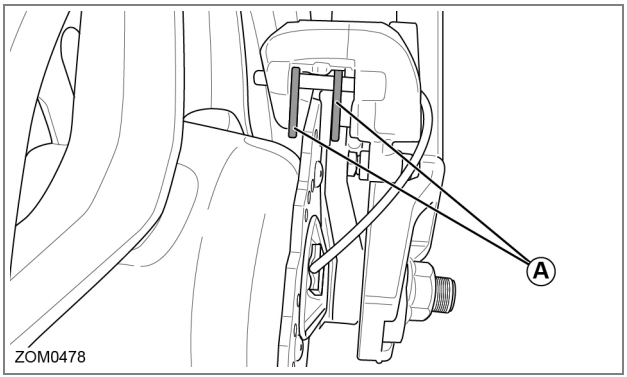

Replace the brake pads if either pad's thickness is 0.05 in (1.35 mm) or less. If the brake pads (A) are worn, replace both brake pads immediately.

Brake Disc Inspection

The thickness of the brake discs should be checked regularly. The minimum thickness is 0.15 in (3.85 mm).

Brake Pad Replacement

Bedding in new brake pads and/or new brake discs is recommended to ensure proper brake performance and maximize brake life. Proper bedding improves brake pedal/lever feel and reduces or eliminates brake squeal. Bedding in the brakes is a process of depositing an even layer of pad material on the surface of the brake disc.

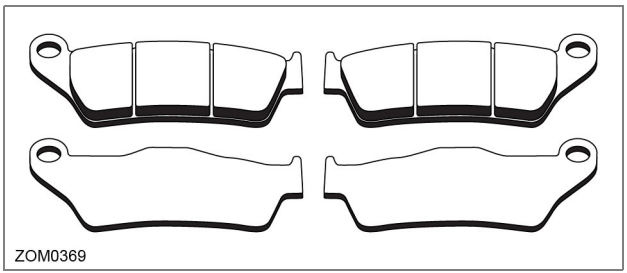

Front brake pads

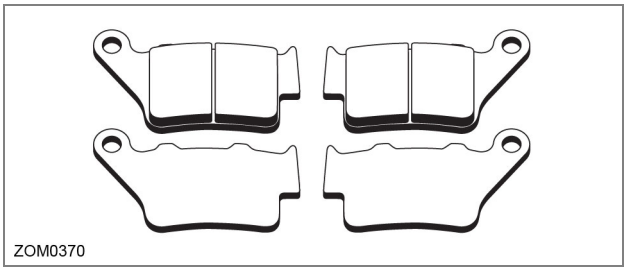

Rear brake pads

WARNING! With new brake systems or just new pads, the first few braking applications will result in very little braking power. Gently use the brakes a few times at low speeds (less than 25 mph [40 km/h]) to develop proper braking friction.

Parking Brake (if equipped)

If your motorcycle is equipped with a parking brake, it should prevent the rear wheel from rolling when the lever (located on the handlebar) is in the ON position. If the rear wheel can roll when the parking brake is applied, it should be adjusted as follows.

Parking Brake Adjustment

1. Support your motorcycle on a stand with the rear wheel off the ground.
2. Position parking brake lever in the OFF position.

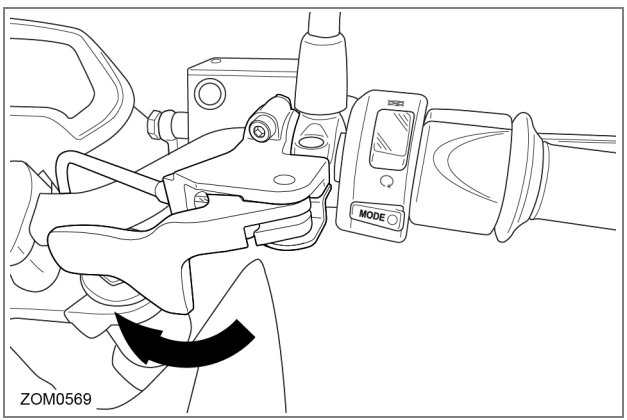

3. Insert a screwdriver into the slot on the end of the cable (A) to prevent it from rotating.
4. Gradually tighten adjustment nut (B) while rotating the wheel until you can feel drag on the brake rotor.

CAUTION: Do not over-tighten the parking brake cable as this can cause premature brake wear.

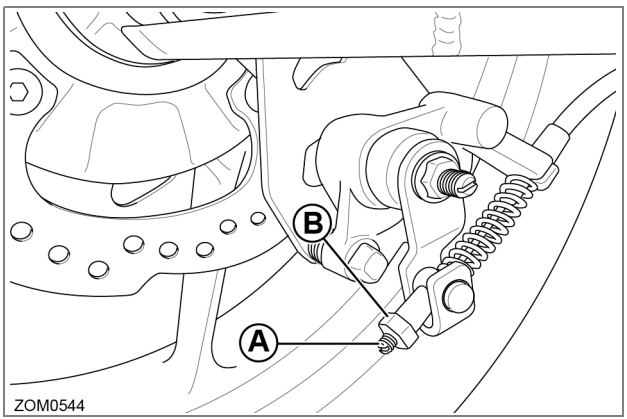

5. Operate the parking brake lever ON and OFF to check adjustment. With the lever applied, you should not be able to rotate the rear wheel.
6. Re-adjust the parking brake if necessary.
7. Remove your motorcycle from the stand.

Suspension

Front

- For maintenance, see Maintenance Schedule on page 6.2.
- To adjust the fork, see Suspension Adjustment on page 4.9.

Rear

WARNING! The shock absorber assembly contains highly pressurized gas.

- Do not attempt to tamper with or open the cylinder or shock.
- Do not subject the shock to high temperature or open flame.

WARNING! Doing either of the above actions can cause the cylinder or shock to explode causing personal injury or death.

For maintenance, see Maintenance Schedule on page 6.2.

To adjust the fork, see Suspension Adjustment on page 4.9.

Wheels And Tires

Inspect both wheels for the following:

- Bent, loose, or missing spokes.
- Bent or cracked rims.
- Impact marks on the rims.

Inspect both tires for the following:

- Cuts, cracks, splits, or missing tread lugs in the tread or sidewall area.
- Bumps or bulges within the tire body.
- Uneven tire tread wear. Wear on one side of the tire tread or flat spots in the tire tread indicate a problem with the tire or motorcycle.
- Exposed tire thread or cords.

If either of the wheels or tires are found to have any of the above conditions, replace the wheel and tire immediately.

Tire Inflation

WARNING! Under-inflation is a common cause of tire failure and may result in severe tire cracking, tread separation, “blowout,” or unexpected loss of motorcycle control, causing serious injury or death.

Tire pressure should be checked and adjusted to the proper inflation levels before each ride. Tire pressure should be checked using an accurate gauge when the tires are cold. This means that the tires have not been ridden on for at least 3 hours. Always replace the valve stem cap when finished adjusting tire pressures.

MODEL	FRONT	REAR
FX	200 kPa (29 PSI)	214 kPa (31 PSI)
FXE and FXS	221 kPa (32 PSI)	234 kPa (34 PSI)

Drive Belt

The drive belt provides low maintenance and quiet operation with minimal stretch. Keep dirt, grease, oil, and debris off the belt and sprockets.The drive belt tension should be checked and adjusted at the intervals specified in the Maintenance Schedule. For maintenance information, see the Maintenance Schedule on page 6.2.

Clean the belt with mild soap and water when washing your motorcycle. Towel dry and inspect for the following:

- Cuts or unusual wear patterns.
- Damage to the center of the belt.
- Outside edge beveling. Some beveling is common but it indicates that sprockets are misaligned.
- Outside ribbed surface for signs of stone puncture.
- Inside (tooth portion) of belt for exposed tensile cords normally covered by nylon layer and polyethylene layer. This condition will result in belt failure and indicates worn sprocket teeth.
- Signs of puncture or cracking at the base of the belt teeth.

If any of the above conditions are found, the belt should be replaced.

Checking Drive Belt Tension

Proper belt tension is essential for optimum operation of the drive system.

Lack of belt tension can lead to “ratcheting.” The teeth of the belt slide over the teeth of the rear sprocket. This causes an unpleasant sound; the ratcheting can also cause damage to the carbon tensile cords. If ratcheting has occurred you should replace the belt before the next time you ride.

Too much tension can increase the wear of your drive system and the system can drag.

The drive belt tension can be checked by using a Tension Tester or the Gates® Carbon Drive™ Smartphone application.

Drive Belt Tension Tester

The Tension Tester has a plastic measurement arm, located in a slot. Along this slot there is a measuring scale. The point of intersection of the measurement arm and the measuring scale shows the tension of the belt. There is a button (clicking pad) on the upper side of the Tension Tester, where you can secure your finger with a rubber band holder. A spring is located underneath this clicking pad. If a certain pressure is applied to the spring, it makes a clicking sound.

Note: The rear fender interferes with checking the belt tension using the Tension Tester from the top side. Belt tension can be checked from under the motorcycle without interference.

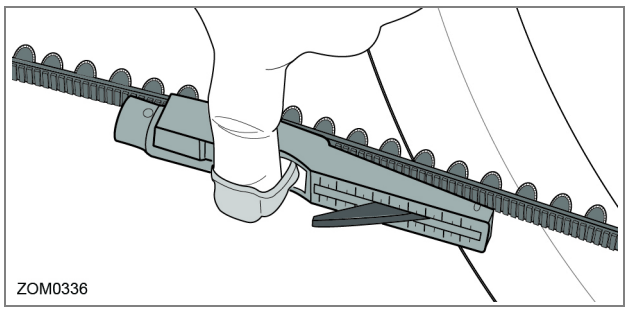

1. Remove the key from the ignition switch.
2. Press the Tension Tester steadily to the non-cogged side of the belt, half of the distance between the motor-driven sprocket and rear wheel drive sprocket. The “lip” of the tester will lead the tester on to the belt.
3. Slowly increase the pressure on the tester, until you hear a clicking sound. Do not increase the pressure after the tester has clicked.
4. Remove the tester carefully from the belt. Avoid rough movements of the tester, as this would change the results of the measurement.
5. Adjust drive belt tension if the measurement is outside the recommended range.

Belt Pitch	Recommended Tension Range
11 mm	25 kg to 76.5 kg

Gates® Carbon Drive™ Smartphone Application

The drive belt tension can be checked by using the Gates® Carbon Drive™ Smartphone application, which measures belt tension frequency.

The application is available for free to download at both the Apple iTunes® store and Google Play® store. iTunes® is a registered trademark of Apple. Google Play® store is a registered trademark of Google.

Note: Perform belt frequency measurement on the lower belt span, close to the center (between the sprockets).

Note: The application works best in a quiet environment.

Note: The following application instructions may differ between phones.

1. Remove the key from the ignition switch.
2. From the application, click the Tension icon and Measure.
3. Confirm the phone's microphone is ON (if applicable).
4. Hold the phone, so the microphone is as close to the drive belt as possible (without touching the belt).
5. Pluck the belt with your thumb or a wrench (as shown) so that it vibrates like a guitar string.

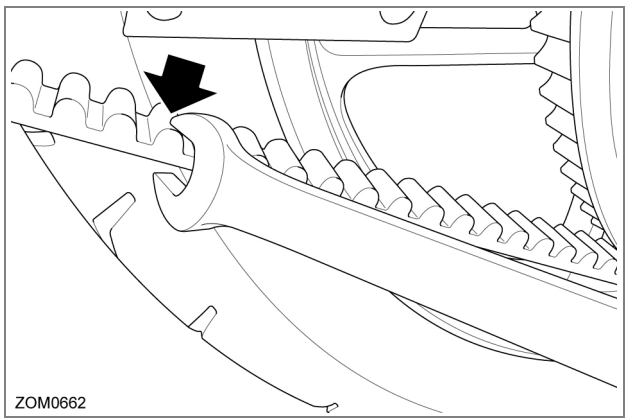

6. The microphone will measure vibration's frequency.

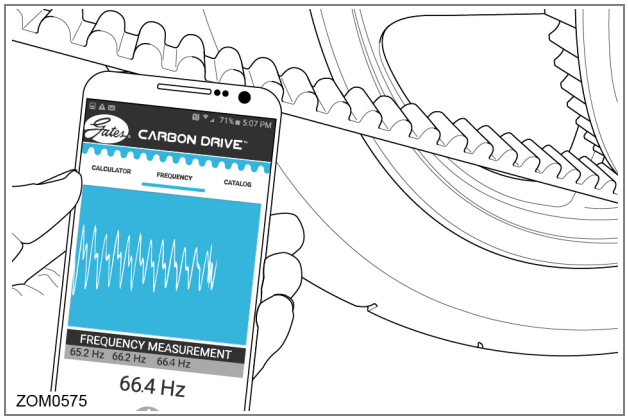

7. Rotate the rear wheel a quarter-turn and repeat the frequency measurement.
8. Compare your belt's frequency readings to the recommended range values below.
9. Adjust drive belt tension if the frequency is outside the recommended range.

Belt Pitch	Recommended Frequency Range
11 mm	42.5 Hz to 73.6 Hz

Drive Belt Adjustment Procedure

Note: Adjust both sides (left and right) equally.

1. Remove key from the key switch.
2. Loosen the rear axle nut (C) on right side of motorcycle.
3. Loosen the (left and right) 13 mm jam nuts (A).
4. Turn the (left and right) 13 mm adjustment bolts (B) 1/4 turn at a time until the belt adjustment is within specification.

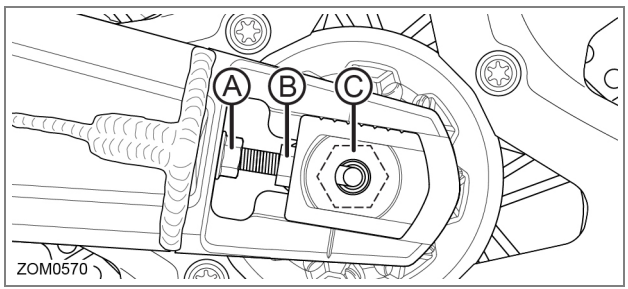

5. Tighten left and right jam nuts (A) to secure the belt.
6. Tighten the axle nut (C) on right side of motorcycle. Torque 75 lb·ft (102 Nm).
7. Test ride the motorcycle.
8. Recheck the belt for proper adjustment after the test ride and readjust, if necessary.

Drive Chain (Optional)

Cleaning The Drive Chain

WARNING! Always wear safety glasses when cleaning the chain to prevent eye injuries.

WARNING! Never place your hand or any other body part between the chain and sprockets. Work with the chain only in the middle between the two sprockets; failure to do so could result in serious injury.

WARNING! Do not allow any of the drive chain cleaner to get on the brake rotors or brake pads. If the brake rotors or brake pads are contaminated with cleaner, it will impair the motorcycle's ability to stop. This could result in serious injury or death.

WARNING! Never have the motor spinning the wheel during cleaning. Turn the wheel only by hand. Failure to do so could result in serious injury or death.

Follow the manufacturer's instructions for the chain cleaner you are using; below are the general guidelines.

1. Remove the key from the key switch.
2. Set the motorcycle on a stand or lift so the rear wheel is free to spin. While turning the wheel by HAND, spray the inside of your entire chain with a good coating of chain cleaner and let it sit for a few minutes.
3. Using a brush, fill the bristles with spray from the chain cleaner. Begin gently scrubbing the chain on the top of your swingarm using the brush.
4. Do this for the entire length of the chain. Now do the same thing for the inside/bottom of the chain.
5. Using the brush, clean both sides of the rear sprocket. Let this soak for 5 minutes.
6. Using a water hose, rinse the entire chain. Then, using a clean rag, wipe any residual moisture from the chain.

Lubricating The Drive Chain

WARNING! Wear safety glasses when lubricating the chain to prevent eye injuries.

WARNING! Never have the motor spinning the wheel. Turn the wheel only by hand. Failure to do so could result in serious personal injury.

WARNING! Never place your hand between the chain and sprockets. Work with the chain only in the middle between the two sprockets. Failure to do so could result in serious personal injury.

WARNING! Do not allow any of the lubricant to get on the brake rotors or brake pads. If the brake rotors or brake pads are contaminated with lubricant, it will impair the motorcycle's ability to stop. This could result in serious personal injury.

Follow the manufacturer's instructions for the chain lubricant you are using; below are the general guidelines. Do not allow any of the lubricant to get on the brake rotor.

To lubricate the drive chain:

1. Turn the wheel backwards slowly and spray the inside of the chain on the inside of the links.
2. Turn the wheel backwards slowly and spray the outside of the chain on the outside of the links.
3. Let the motorcycle stand for 30 minutes to allow the lubricant to penetrate the link rollers.

Checking The Drive Chain

1. Remove the key from the key switch.
2. Using a ruler, grasp the chain halfway between the front and rear sprockets.
3. The chain should move 0.63 in (16 mm) in either direction, so 1.25 in (32 mm) of total free play.
4. If the chain's free play is not within specifications it will need to be adjusted (see the next page).

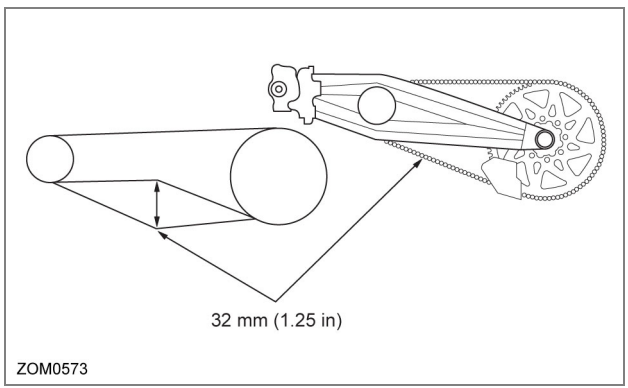

Adjusting The Drive Chain

Note: Adjust both sides equally.

1. Remove key from the key switch.
2. Loosen the rear axle nut (C) on right side of motorcycle.
3. Loosen the (left and right) 13 mm jam nuts (A).
4. Turn the (left and right) 13 mm adjustment bolts (B) 1/4 turn at a time until the chain adjustment is within specification.

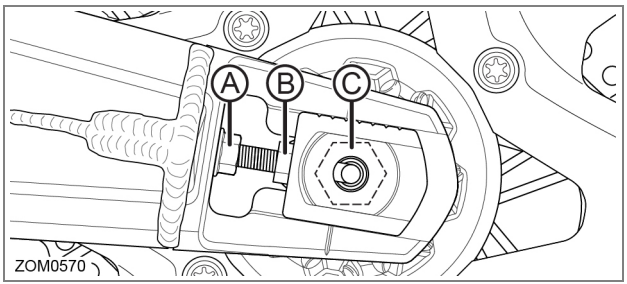

5. Tighten left and right jam nuts (A) to secure the chain.
6. Tighten the axle nut (C) on right side of motorcycle. Torque 75 lb·ft (102 Nm).
7. Test ride the motorcycle.
8. Recheck the chain for proper adjustment after the test ride and readjust, if necessary.

Seat Removal - FXE

The seat must be removed to gain access to the diagnostic connector.

Removing the riders seat

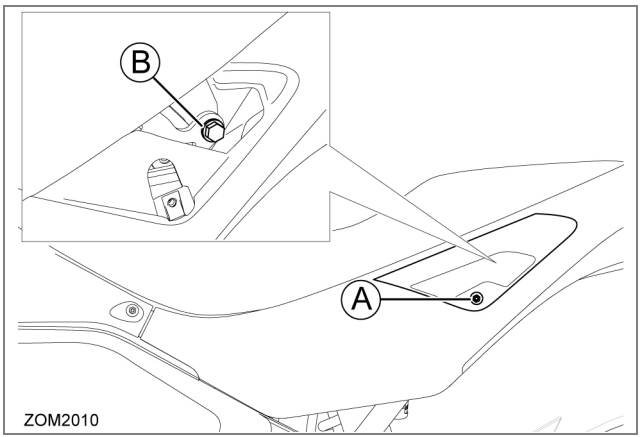

1. Remove two Torx bolts (A) securing both left and right covers to the tail panel. Remove covers.
2. Remove two bolts (B) securing the rider's seat to the frame. Torque - 11 lb·ft (15 Nm).

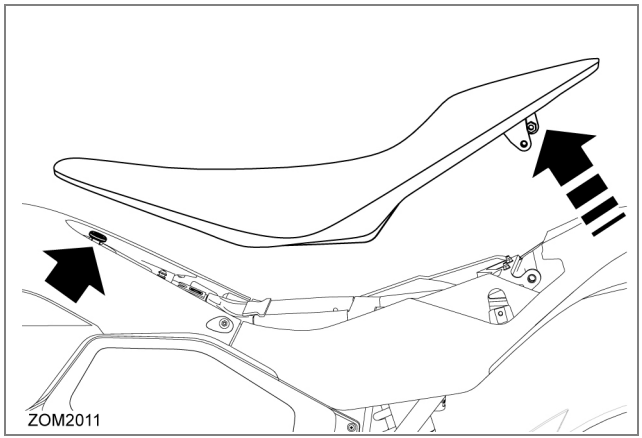

3. Raise the rear of the seat and then slide forward to release the seat from the seat mounting point.
4. Remove the seat.

Installing the seat

1. Installation of the seat is the reverse of the removal procedure.

Note: During installation of the seat, confirm the front of the seat is properly located on the seat mount prior to reinstalling the securing bolts at the rear.

Side Panel - FXE

Note: The left side panel will need to be removed to gain access to the power pack low power B+ fuse.

Removing the side panel

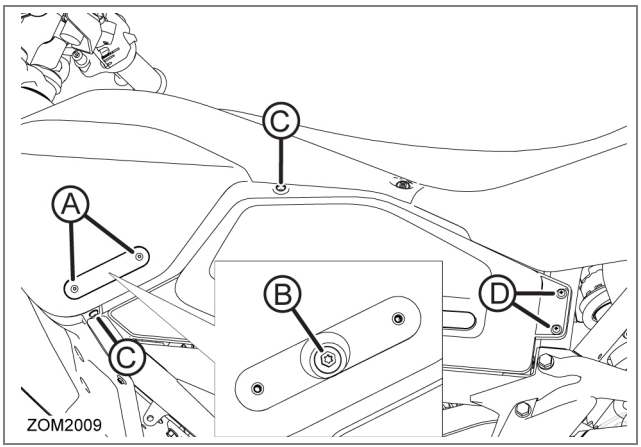

1. Remove two 2.5mm Hex head screws and washers (A) securing cover to front panel and remove cover. Torque 8 in·lb (1 Nm).
2. Remove T25 Torx bolt (B) securing front panel to side panel. Torque - 3.5 lb·ft (5 Nm).
3. Remove two 3mm Hex head bolts (C) and collect washers securing side panel to front panel. Torque - 2 lb·ft (3 Nm).
4. Remove two cross-head screws (D) securing side panel to frame.
5. Release side panel from front panel and remove.

Installing the seat

1. Installation of the seat is the reverse of the removal procedure.

CAUTION: Do not over tighten fasteners securing side panel to front panel and frame.

Front Panel - FXE

The front panel must be removed to gain access to the 12 volt fuse center.

Removing the front panel

1. Remove the seat. See “Seat Removal - FXE”, on page 6.23.
2. Remove the left and right side panels. See “Side Panel - FXE”, on page 6.24.

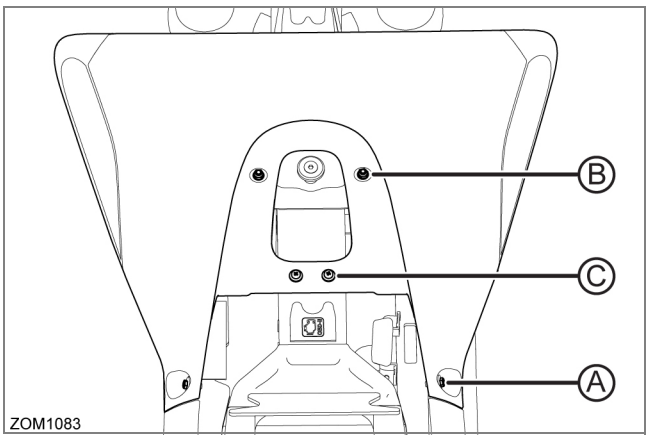

3. Remove two T25 Torx bolts (A) securing front panel to frame. Torque - 3.5 lb·ft (5 Nm).
4. Remove two 8mm nuts (B) and collect washers securing front panel to frame. Torque - 3.5 lb·ft (5 Nm).
5. Remove two cross-head screws (C) securing front panel to frame.

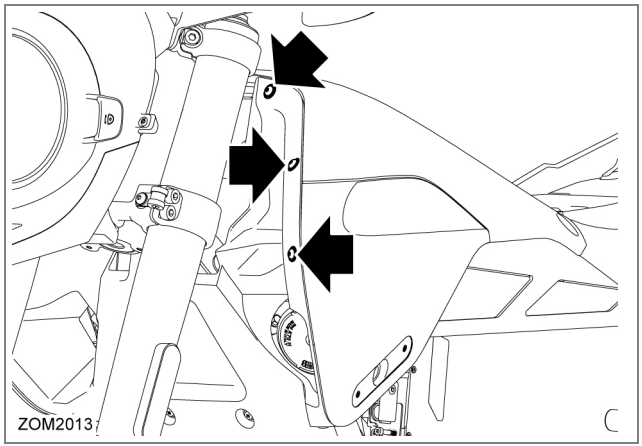

6. Remove six 3mm Hex head bolts and collect washers securing close-out panel to front panel. Torque - 2 lb·ft (3 Nm).
7. Remove front panel.

Installing the front panel

1. Installation of the front panel is the reverse of the removal procedure.

Front Panel - FX/FXS

The right front panel must be removed to gain access to the 12 volt fuse center.

Removing the body panel

1. Remove seat.

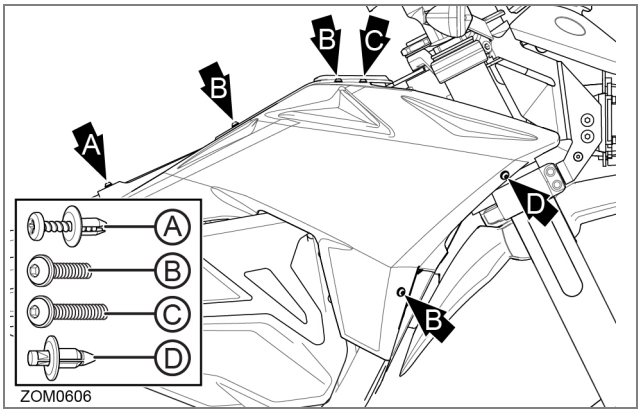

2. Remove 6 fasteners securing the body panel to the frame.
3. Remove body panel.

Installing the body panel

1. Installation of the front panel is the reverse of the removal procedure.

Note: When installing the body panel, make sure that no cables/wires are trapped between the frame and panel before tightening the fasteners.

Headlight Alignment

The headlight should be checked for correct alignment periodically. It must be aligned any time the suspension sag is adjusted because this will affect the headlight alignment. Before the headlight can be aligned, the suspension sag and tire pressure must be correctly adjusted. The headlight can be adjusted vertically. If the vertical adjustment is off, it will cause the beam to point too close to or too far ahead of the motorcycle. With the headlight on the low beam position, the motorcycle perpendicular to the ground, and the operator sitting on the motorcycle, verify the beam alignment. The motorcycle is shipped with the headlight at a 0.5-2.5% dip.

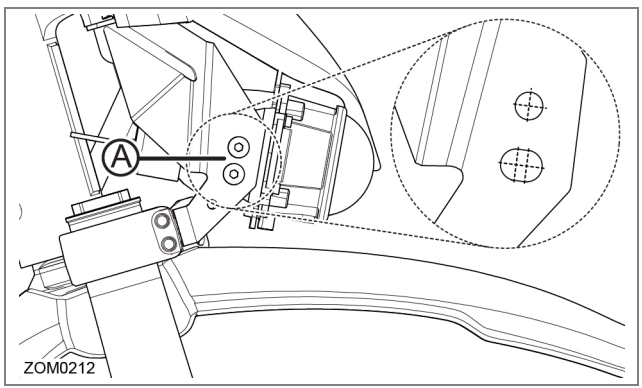

The four headlight assembly retaining bolts (A) are located on the sides of the headlight assembly retaining brackets. To adjust the headlight, loosen all four bolts, pivot the assembly until the correct beam alignment is achieved, then tighten all tighten bolts.

Headlight Bulb Replacement - FX/FXS

WARNING! Halogen bulbs contain gas under pressure. Handling a bulb improperly could cause it to shatter into flying glass fragments, which could result in serious injury. To help avoid serious injury:

- Turn the key switch OFF and allow the bulb to cool before changing the bulb.
- Leave the key switch OFF until the bulb change is complete.
- Always wear eye protection when changing a halogen bulb.
- Avoid touching the glass.

To replace the bulb:

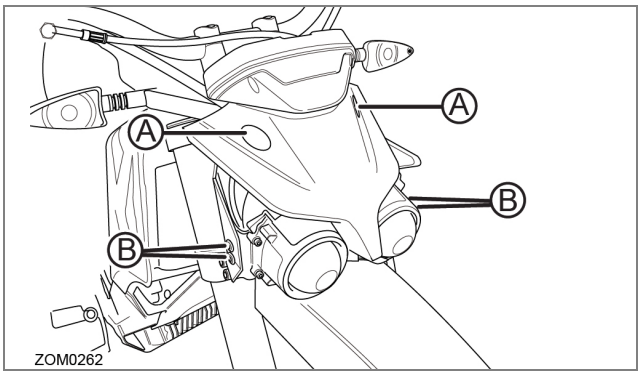

2. Remove the two bolts (A) securing the trim cover above headlight assembly to the motorcycle.
3. Release and remove the trim cover.
4. Remove the four bolts (B) securing the headlight assembly to the headlight assembly retaining brackets.
5. Release the headlight assembly.

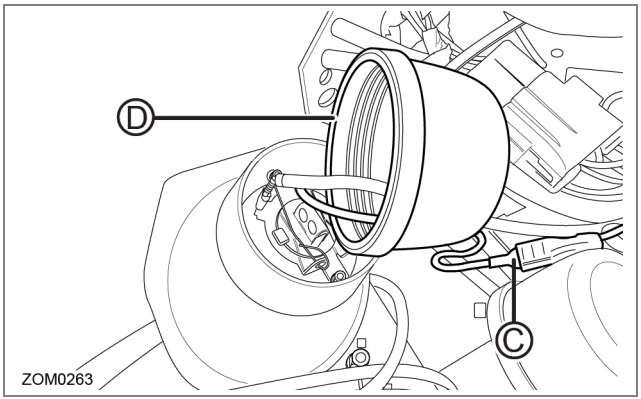

6. Disconnect the headlight bulb connector (C).
7. Release the headlight bulb sealing boot (D).

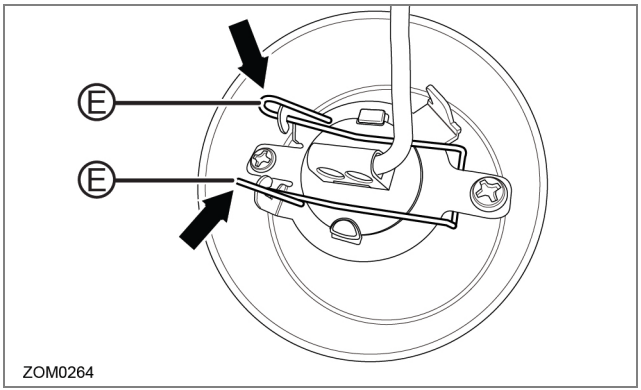

8. Unhook the headlight bulb spring clip (E) by pushing down and to the side.
9. Lift up on the spring clip and remove the headlight bulb.

CAUTION: Do not touch the glass portion of the headlight bulb. Keep the headlight bulb free of contaminants. Oil from your fingers or contaminants will shorten the life of the bulb. Thoroughly clean any fingerprints or contaminants from the bulb using a clean cloth moistened with alcohol.

10. Install the replacement headlight bulb into the lens.
11. Installation is the reverse of the removal procedure.

Headlight Bulb Replacement - FXE

The headlight unit uses LED technology in place of traditional filament bulbs. If the headlight fails to operate, please contact your Zero Motorcycles dealer to have it replaced.

Turn Signal Light Bulb Replacement

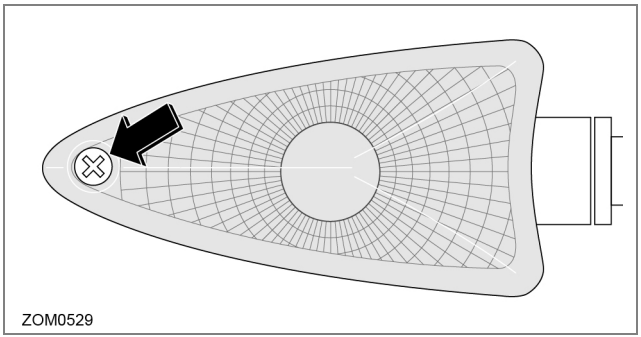

1. Remove the turn signal lens screw (A) and remove the lens.
2. Push in on the bulb, turn the bulb counterclockwise, and then pull the bulb out.
3. Insert the new bulb into the socket, push in and turn clockwise until it stops.
4. Install the lens and screw; tighten the screw. Do not over-tighten the screw.

Brake/Tail Light Bulb Replacement

To replace the brake/trail light bulb:

1. Remove the brake/tail light lens screws (A) and remove the lens.

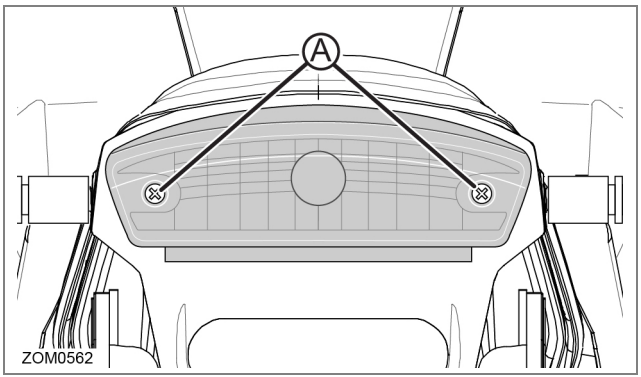

2. Push in on the bulb and turn the bulb counter-clockwise then pull the bulb out.
3. Insert the new bulb into the socket, push in and turn clockwise until it stops.
4. Install the brake/tail light lens and screws; tighten the screws. Do not over-tighten the screws.

Running Light Bulb Replacement

1. Remove the two bolts (A) securing the trim cover above headlight assembly to the motorcycle.
2. Release and remove the trim cover.
3. Remove the four bolts (B) securing the headlight assembly to the headlight assembly retaining brackets.

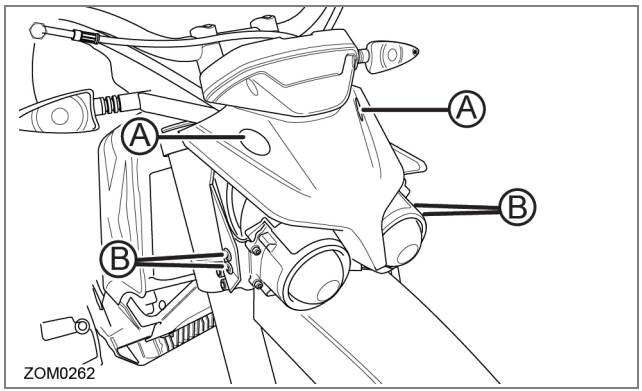

4. Release the headlight assembly.
5. Release the running light bulb retainer from headlight (C).

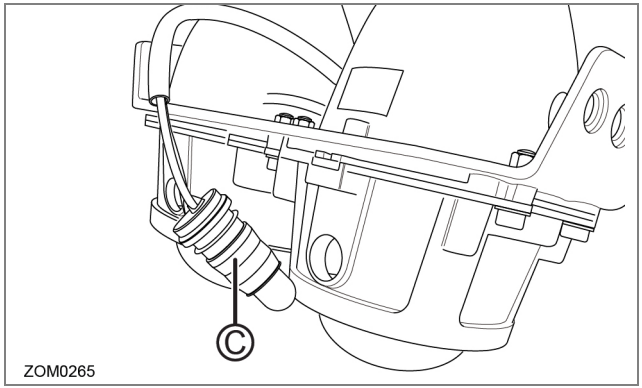

6. Remove the running light bulb from retainer.
7. Install the replacement running light bulb into retainer.
8. Installation is the reverse of the removal procedure.

Cleaning

CAUTION: Improper cleaning can damage electrical components, cowlings, panels, and other plastic parts. Do not use high pressure water or steam cleaners; they can cause water intrusion of bearing, seals, and electrical components. Avoid spraying water of great force around the dash unit, quick charge connector, power pack, or controller.

To prolong the life of your motorcycle it should be washed periodically. Regular cleaning is an important factor in maintaining the value of your motorcycle. It also ensures that safety related parts remain in full working order.

If tar, bugs, or other similar deposits have accumulated, clean them off as soon as possible.

WARNING! After cleaning and before starting your journey, always test the brakes.

Washing

CAUTION: Do not use any harsh chemical products on plastic parts. Be sure to avoid using cloths or sponges which have been in contact with strong abrasive cleaning products, solvent or thinner, fuel (gasoline), rust removers or inhibitors, brake fluid, antifreeze, or electrolyte.

Note: We recommend the use of a garden hose to wash your motorcycle. High-pressure washers (like those at coin-operated car washes) can damage certain parts.

1. Gently wash your motorcycle with a sponge or a clean soft cloth, mild detergent, and plenty of water.
2. Use care when cleaning the plastic parts (dash, fenders, and side panels), which can scratch easier than the other parts of your motorcycle.
3. After washing, rinse your motorcycle thoroughly with plenty of clean water to remove any detergent residue.
4. Dry your motorcycle with a chamois or a soft, dry towel.
5. After cleaning, inspect for damage, wear or leaks.

After washing the motorcycle, allow all of the electrical components to dry prior to operation. If the motorcycle is ridden after being washed, apply both brakes several times in order to remove any moisture from the brake pads.

Wheels and Tires

Avoid using strong acidic wheel cleaners, especially on spoked wheels. If such products are used on hard-to-remove dirt, do not leave the cleaner on the affected area any longer than instructed. Also thoroughly rinse the area off with water, immediately dry it, and then apply a corrosion protection spray.

Do not use products such as tire dressings on tires as this will deteriorate traction.

Parking and Long Term Storage

- Whenever you plan on not riding or storing your motorcycle for extended periods of time (more than 30 days), it is recommended that you charge the power pack to approximately 60% state of charge (SOC) and then leave the charger disconnected.
- If the key switch has not been in the ON position within the last 30 days, the Battery Management System (BMS) will activate long term storage mode which will automatically drain the battery to 60% SOC. If the motorcycle is connected to the charger while in long term storage mode, the maximum SOC will be limited to 60%.
- The power pack will discharge extremely slowly over time. Check the SOC at least monthly and charge it back up to 60% if it has dropped below 30%.
- To prolong the life of your power pack you should store your motorcycle in a cool area. Storing your motorcycle in a hot area will cause your power pack's life to be shortened. The recommended storage temperature is -4°F (-20°C) to 95°F (35°C).
- When you're ready to take your motorcycle out of storage to ride it again, turn the key switch to the ON position and back to OFF to exit long term storage mode. Charge for at least 24 hours to ensure optimal cell balance is restored.

For more information on the power pack and the electrical system, see page 5.1.

WARNING! Opening of the power pack is for trained Zero Motorcycles technicians. Please be aware that incorrect handling of a Zero power pack can be dangerous. DO NOT OPEN!

Zero Motorcycles Accessories

Zero Motorcycle accessories are designed to complement and function with other systems on your motorcycle. Your dealer can accessorize the motorcycle using genuine Zero accessories.

A full line of parts, accessories, and apparel can be found on the Zero Motorcycles website.

Fuses

Whenever there is an excessive amount of current flowing through a circuit the fusible element will melt and create an open or incomplete circuit. Fuses are a one-time protection device and must be replaced each time the circuit is overloaded. Replace the fuse with one of equal current and voltage rating. If the fuse melts repeatedly, have the electrical system inspected by your dealer.

To access the 12 volt fuse center and the ABS fuse, the RH front body panel has to be removed.

12 Volt Fuse Center

The 12 volt fuse center is located on the frame under the front body panel.

To replace a 12V fuse:

1. FX/FXS: Remove the right front body panel. See “Front Panel - FX/FXS”, on page 6.26.
2. FXE: Remove the front body panel. See “Front Panel - FXE”, on page 6.25.

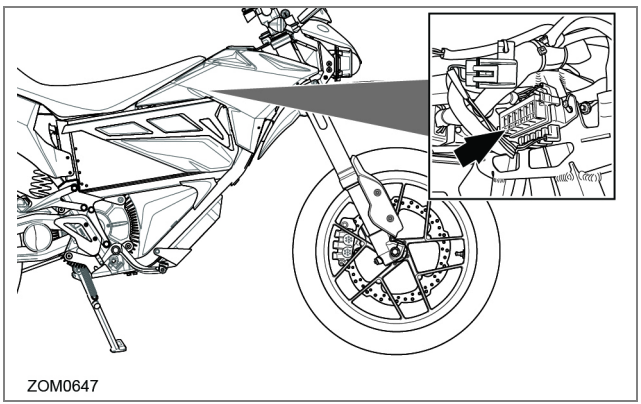

3. Squeeze the tabs (A) together and remove the protective cover.
4. Replace the required fuse.

Note: After replacing the defective fuse(s), remember to reinstall the fuse center cover.

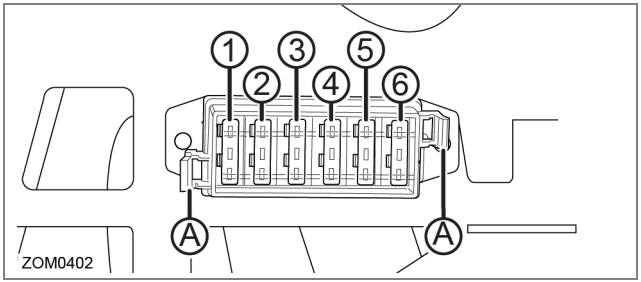

The 12 volt fuse values are listed below:

FUSE	RATING	CIRCUITS CONTROLLED
1	5A	ABS 4, Key
2	10A	ABS 9, Valve
3	10A	Headlight
4	10A	Accessory Port
5	10A	Flash Lights, Turn Signals, Horn, Brake/Tail Light
6	5A	Dash, Running Lights

ABS Fuse

The ABS fuse is located on the frame under the front body panel.

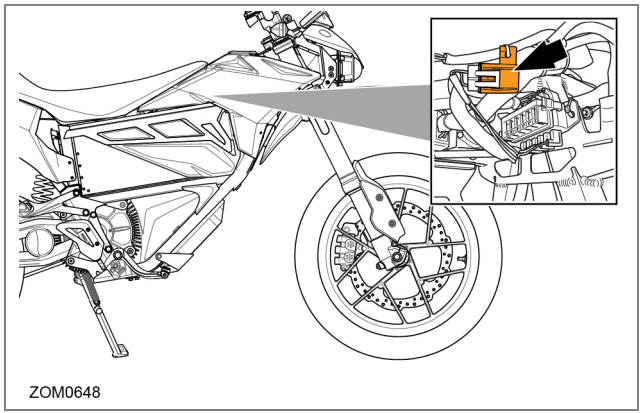

The ABS fuse holder (see arrow) is plugged into a protective red cap. To release the fuse holder from the red cap, gently pull the tab away from the cap and pull fuse holder.

To replace the ABS fuse:

1. FX/FXS: Remove the right front body panel. See “Front Panel - FX/FXS”, on page 6.26.
2. FXE: Remove the front body panel. See “Front Panel - FXE”, on page 6.25.
3. Gently pull the tab (A) away from the red cap to release the fuse holder and pull fuse holder.
4. Replace the fuse (0).

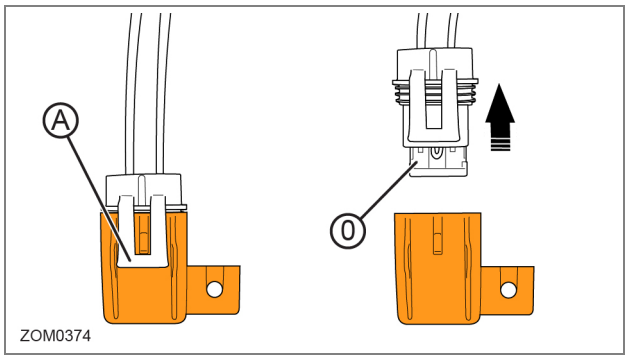

The ABS fuse value is listed below:

FUSE	RATING	CIRCUITS CONTROLLED
0	25A	ABS-18 Motor

High Voltage Fuse Locations

The high voltage fuses are located behind the side inspection panels.

To access the high voltage fuses (left side):

1. Ensure that the key switch is in the OFF position.

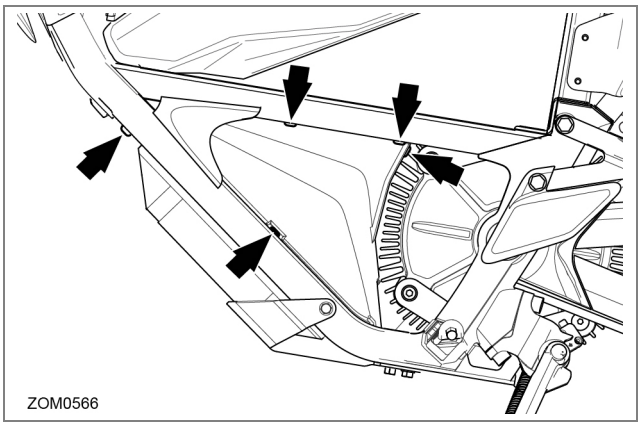

2. Remove the 5 fasteners (see arrows) securing the flexible protective cover to the motorcycle.
3. Remove the flexible protective cover to gain access to the fuses.

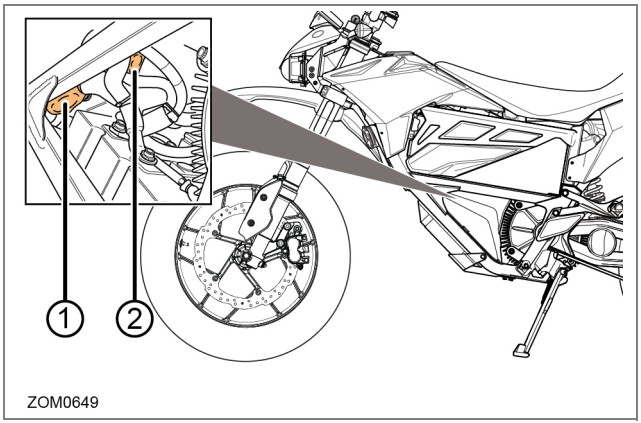

4. Pull back sheathing to access fuse holders (if necessary).
5. Unscrew the fuse's cap (1 and 2).
6. Replace the fuse.

To access the high voltage fuses (right side):

1. Ensure that the key switch is in the OFF position.

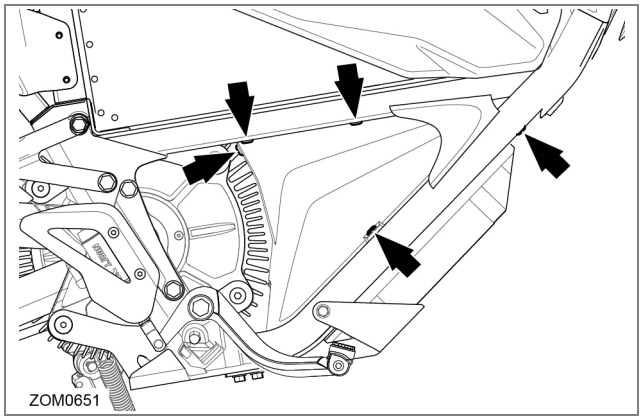

2. Remove the 5 fasteners securing the flexible protective cover to the motorcycle.
3. Remove the flexible protective cover to gain access to the fuse.

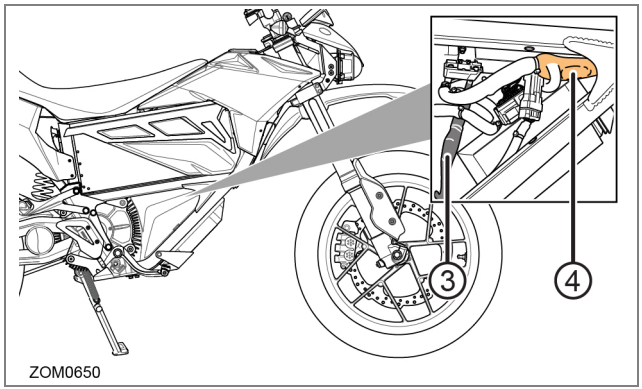

4. Pull back sheathing to access fuse.
5. Replace the fuse.

The high voltage fuse values are listed below:

FUSE	RATING	CIRCUITS CONTROLLED
1	ABC4A	Main Bike Board/Controller
2	ABC4A	DC/DC Converter
3	JLLN100	ACCY Charge Fuse (in-line)
4	ABC10A	Charge Fuse (on-board)

Note: If the charge fuse (3) needs replacement, contact your Zero Motorcycles dealer.

Low Power B+ Fuse (ZF7.2)

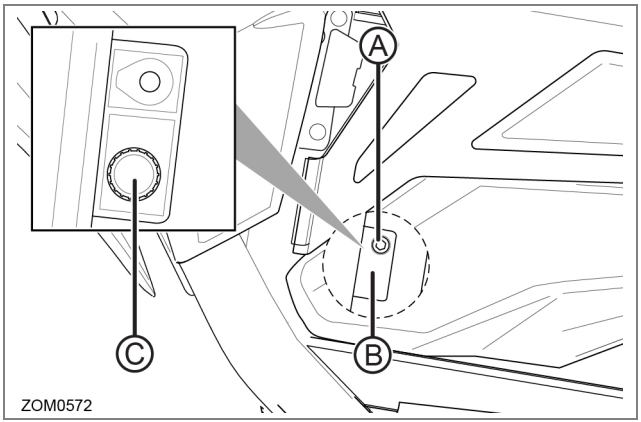

To access the fuse:

1. FXE: Remove left side panel. See “Side Panel - FXE”, on page 6.24.
2. Remove bolt (A) securing the fuse cover.
3. Remove cover (B) to gain access to the fuse.
4. Unscrew the fuse cap (C) and withdraw the fuse from the battery.
5. Pull fuse from fuse cap and replace fuse with one of equivalent rating (SPT**3.15**A)
6. Install fuse and cap.
7. Install cover (B) and secure with bolt (A). Torque - 1 lb·ft (1.3 Nm).

Electric Motorcycle Precautions

Your Zero Motorcycle has high voltage components. The high voltage used by these components is dangerous and can cause personal injury, severe burns, electric shock and even fatal injury unless appropriate precautions are taken.

Always observe and obey the instructions on labels attached to components on the vehicle - they are there for your safety.

Do not touch, attempt to remove or replace any high voltage parts, wiring (identified by the orange outer sleeving) or connectors. If the motorcycle is involved in an accident do not touch any high voltage wiring connectors or the components connected to the wiring. If a motorcycle fire occurs, extinguish visible flame with a Class D power-type fire extinguisher. After flame has extinguished, douse with a water-based fire extinguisher.

WARNING! Your motorcycle uses high voltage. System components can be too hot to touch during and after starting and when the motorcycle is shut off. Be careful of both the high voltage and the high temperature. Obey all labels that are attached to the motorcycle.

WARNING! The motorcycle's high voltage system has no user serviceable parts. Disassembling, removing or replacing high voltage components, cables or connectors can cause severe burns or electric shock that may result in serious injury or death. High voltage cables are colored orange for easy identification (see First Responder Information illustration at the back of this manual).

Troubleshooting Your Motorcycle

All of the motorcycles are carefully inspected before they are delivered. Even after the motorcycles are inspected, some technical issues can occur. The following information offers a guide to help you to identify an issue, and if possible, repair it yourself. If you are unable to solve an issue with your Zero FX/FXE/FXS electric motorcycle, take it to an authorized dealer at your convenience. If there is no dealer in your area call Zero Motorcycles Customer Service.

System Warning Indicator

If a fault has been detected, count the number of times the red indicator light (A) flashes (flashing sequence does repeat).

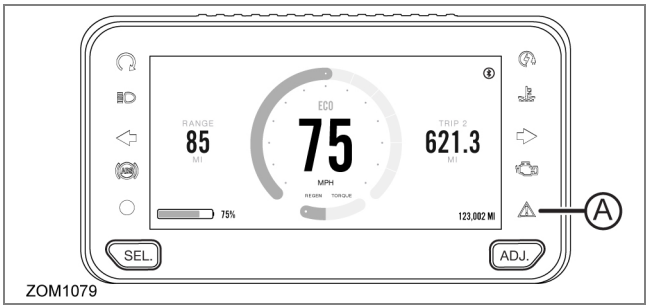

Refer to the table starting on the next page for possible causes and solutions to the issue.

NUMBER OF RED FLASHES		CAUSE	SOLUTION
1		Safety Override is Active (when blinking fast constantly)	
1		BMS Isolation Fault (when blinking fast intermittently)	
1		Charger Not Charging (when accompanied by fast constant blink of the Charge LED or all blinking dash segments)	
1		Motor Stop Switch Disabled or Kickstand Switch Disabled	Motor stop switch is in the OFF position. Press the motor stop switch ON button. Kickstand is down. Raise kickstand.
2		Self-Test Failed	Contact Zero or your dealer.
3		High Throttle Disable	Throttle is ON or throttle/connection is bad. Verify throttle action and/or check connection.
4		Precharge Fail	Could not pre-charge motor controller. Contact Zero or your dealer.
5		Low Power Pack Disable	Charge Power Pack Before Riding.
6		Contactor Error	Contact Zero or your dealer.
7		Charger Problem	Contact Zero or your dealer.
8		Controller Area Network (CAN) Error	Contact Zero or your dealer.
9		Battery Management System (BMS) Throttle Disable	Contact Zero or your dealer.

NUMBER OF RED FLASHES		CAUSE	SOLUTION
10		Module Variance Too High	Contact Zero or your dealer.
11		Battery Temperature Sensor Fault	Motorcycle will run, but needs service. Contact your dealer.
12		Welded Contactor	Contact Zero or your dealer.
13		Motor Controller Error	Motorcycle needs service. Contact Zero or your dealer.
14	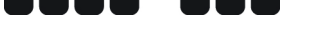	Loopback Error	Needs second module, or blanking plug inserted.
15		Battery Management System (BMS) Startup Error	Reset BMS with button. If problem persists contact Zero or your dealer.
16		Battery Management System (BMS) Internal Disable	Cycle Ignition Key OFF and then ON again, or reset BMS with button. If problem persists contact Zero or your dealer.
17		Battery Management System (BMS) Internal Fault	Cycle Ignition Key OFF and then ON again, or reset BMS with button. If problem persists contact Zero or your dealer.
18		Miscellaneous Error	Contact Zero or your dealer.

Diagnostic Codes

If a diagnostic code has been recorded, it can be retrieved from dash Display A. To retrieve the code, see Display A on the “Display A”, on page 3.13.

Refer to the table starting on the next page to identify the error associated with the Error Code number.

CODE	DESCRIPTION
0	No Error
1	High Throttle
2	Motor Temperature Warning Stage 1
3	Motor Temperature Warning Stage 2
4	Controller Temperature Warning Stage 1
5	Controller Temperature Warning Stage 2
6	BMS Throttle Enable Wire Error
7	Low Battery Voltage
8	High Battery Temperature Status
9	Low Battery Temperature Status
10	Battery Temperature Warning Stage 1
11	Battery Temperature Warning Stage 2
12	Reserve Partition Warning
13	Reserve Switch Warning
14	Safety Override Active
15	Charger Attached But Not Charging
16	CIB Contactor Compromised
17	Charger Error
18	Battery Temperature Sensor Fault
19	High Charge Current
20	BMS Low Isolation

CODE	DESCRIPTION
21	Board Vpack Error
22	Board Temperature Error
23	Post Error
24	Startup Error
25	Contactor Open Warning
26	Contactor Welded Error
27	Precharge Error
28	BMS Isolation Fault
29	BMS Isolation Danger
30	BMS CAN Error
31	SEVCON CAN Error
32	Module Variance Too High
33	SEVCON Error Turn Off
34	Charge Error Turn Off
35	Loopback Error
36	Board 5V Error
37	Board 3 3V Error
38	Idle Turn Off
39	Throttle Out Of Range Disable
40	BMS Throttle En Wire Disable
41	Low Battery Voltage Disable

CODE	DESCRIPTION
42	High Battery Temperature Status Disable
43	Low Battery Temperature Status Disable
44	Kill Switch Disable
45	Kickstand Switch Disable
46	BMS Charger Connected Disable
47	MBB Charger Connected Disable
48	SEVCON Startup Disable
49	Contactor Open Disable
50	BMS Self-Test Error
51	BMS Self-Test Warning
52	Reserve Partition Disable
53	BMS Internal Disable
54	Internal Disable Error
55	Internal Fault Error
56	Monolith Not Connected
57	Module Did Not Connect
58	BMS Sensor Warning
59	BMS System Warning
60	Bike Configuration

Note: If code 57 is retrieved, your motorcycle may only require recharging.

General Troubleshooting

SYMPTOM	POTENTIAL CAUSE	POTENTIAL SOLUTION
Motorcycle does not turn on	Power Pack not charged. Key not properly engaged. Motor stop switch turned OFF. Fault code set.	Charge Power Pack. Recheck key in ignition, turn OFF/ON again. Press the motor stop Switch ON button. See Charge Fault Code chart on page 7.11 or see Understanding BMS Flash Code Patterns starting on page 7.12.
Charger not working	A/C power missing. Fault code set	Check A/C outlet for power, A/C source check fuse/voltage. See Charge Fault Code chart on page 7.11 or see Understanding BMS Flash Code Patterns on page 7.11.
Handlebars wobbly (shimmy)	Incorrect tire pressure	Inflate to correct tire pressure. See page 6.15.
	Deformed front tire	Replace/balance front tire with the same tire supplied from the factory.
	Bald tire (excess wear)	Replace/balance tire with the same tire supplied from the factory.
	Loose headset bearings	Inspect the headset for wear or damage, replace any worn or damaged parts. Tighten the headset pre-load.

Battery Management System

The Battery Management System (BMS) is located inside the power pack. On motorcycles equipped with ZF3.6 modular power packs, a window (A) on the side of the power pack provides a visual notification about the status of the power pack.

There are four LED lamps that will flash: one red and three green lamps. The window is located on the front side of the power pack. Refer to the following pages to understand the meaning of the BMS flash code patterns.

Note: The other circular cover is for diagnostics only.

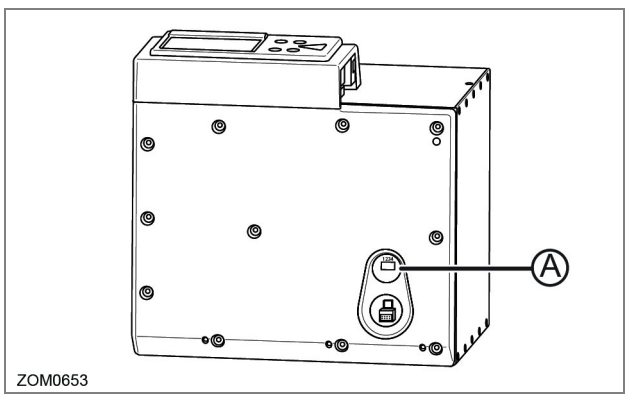

Understanding BMS Flash Code Patterns (Idle Mode)

In this mode the key is OFF and the power pack is not being charged (the BMS is only monitoring the battery).

1 RED	2 GREEN	3 GREEN	4 GREEN	ON	OFF	MEANING	SOLUTION
			√	50 ms	5 sec	Healthy	BMS OK
√			√	50 ms	5 ms	Isolation Fault	Contact Zero or the Dealer
√				50 ms	60 sec	Pack Low	Charge power pack
√				50 ms	1 sec	Number of Cell Packs Not Set	Contact Zero or the Dealer
√				50 ms	1 sec	Self-Test Failed	Contact Zero or the Dealer
			√	50 ms	250 ms	Waiting for UART Input	Contact Zero or the Dealer
sec = seconds **ms = milliseconds**							

Understanding BMS Flash Code Patterns (Charge Mode)

This mode is with the charging cord plugged into the AC power, and the key in the OFF position. During the Charging process, first all lights will flash. Next, lights 1 through 4 will flash depending on the power pack's state of charge.

1 RED	2 GREEN	3 GREEN	4 GREEN	ON	OFF	MEANING	SOLUTION
√	√	√	√	100 ms	5 sec	Charge Complete	Unplug Charger
Charging							
√				2 sec		25%	Continue Charging
√	√			2 sec		50%	Continue Charging
√	√	√		2 sec		75%	Continue Charging
√	√	√	√	2 sec		100%	Continue Charging
Balancing							
		√		500 ms		Power Pack Unbalanced	Let the Power Pack Cool Down
	√		√	500 ms			
Temperature Disable							
√			√	100 ms	500 ms	Too Hot	Let the Power Pack Cool Down
sec = seconds **ms = milliseconds**							

Understanding BMS Flash Code Patterns (Run Mode)

In this mode, the key is in the ON position.

1 RED	2 GREEN	3 GREEN	4 GREEN	ON	OFF	MEANING	SOLUTION
√				5 sec	1 sec	25% of Power Remaining	Charge Soon
√	√			5 sec	1 sec	50% of Power Remaining	Charge Soon
√	√	√		5 sec	1 sec	75% of Power Remaining	Charge Soon
√	√	√	√	5 sec	1 sec	100% of Power Remaining	OK
sec = seconds **ms = milliseconds**							

Power Pack Empty

If the power pack is completely empty, the BMS disables the throttle. You cannot ride the motorcycle until you recharge the power pack. If the Power Pack does not have a partial charge after two hours of charging time, contact your dealer. Your power pack may need to be repaired or replaced.

Power Pack Full (High Power Pack-Voltage)

If the BMS detects that the power pack is already full, it disables any further charging to prevent damage to the power pack.

This is not an error-condition; it is the result of a successful charging cycle. There is no self-test flash code which reports this condition.

During an ordinary charging cycle, when the cells are balanced, the charger (not the BMS) senses that the power pack is full and terminates the charging cycle with a “green light.” The BMS does have a redundant back-up mechanism to prevent overcharging of the power pack. If the charger fails to terminate a charging-cycle when the power pack is full, the BMS will terminate charging automatically to prevent damage.

Power Pack Too Hot

The power pack contains internal temperature sensors. If the BMS measures excessive internal temperatures, it flashes an error code and disables the throttle. You cannot ride the motorcycle until the power pack cools down. Place the motorcycle in a cool, well-ventilated location and wait a few minutes before riding again. If the “High Battery Temperature Status Disable” (42) error code still flashes after the power pack has had time to cool down, contact your dealer. Your power pack may need to be repaired or replaced.

Power Pack Unbalanced

The power pack contains many individual cells. The BMS continuously monitors the cells and tries to keep them all “in balance” (at the same level-of-charge). If any of the cells are grossly out-of-balance, the BMS flashes a Power Pack Unbalanced error code and disables the throttle. You cannot ride the motorcycle until the problem is resolved.

The solution to the problem is to plug in the charger and allow the power pack to charge for 72 hours. This allows the BMS to re-balance the cells in the power pack. If the Power Pack Unbalanced error code still flashes after the power pack has spent more than 72 hours charging, contact your dealer. Your power pack may need to be repaired or replaced.

Other Error-Flash Patterns

If the BMS in your power pack produces an error code, which is not described in Understanding BMS Flash Code Patterns, then the power pack has encountered a serious internal hardware problem and must be repaired or replaced by a dealer.

Cold and Hot Weather Considerations

Cold Weather

Cold weather operation of the motorcycle has no permanent impact on its power pack/cells; however, the rider may see a reduction in range due to the effect cold temperature has on the amount of energy the pack/cells can release. The colder the weather, the greater the effect; so that, as compared to operation in 80°F (27°C) ambient, at 30°F (-1°C) ambient, the rider could experience a temporary reduction in range of up to 30%.

In extreme cold weather the motorcycle may also experience a temporary reduction in power and, correspondingly, achieved top speed.

It is not recommended that the motorcycle be ridden while its power pack temperature is below 23°F (-5°C). If it is, its battery needs to be put on the charger at a temperature above 32°F (0°C) as soon as the ride is concluded. It is worth noting that the Battery Management System (BMS) will not allow the power pack to be discharged below -4°F (-20°C), which is the absolute lowest discharge temperature prescribed by the cell manufacturer.

Storage of the motorcycle for the winter in a non-heated garage is acceptable, as long as:

1. the coldest temperature in the garage does not fall below -4°F (-20°C).
2. the battery has a ~60% state of charge prior to storage and you check its state of charge at least monthly and charge it back up to 60% if it has dropped below 30%
3. the power pack is initially topped off at a temperature above 32°F (0°C).

Storage temperatures below -4°F (-20°C may result in accelerated permanent decay of the power pack performance, and hence it is not recommended. Above this temperature and following the long-term storage guidelines (see “Parking and Long Term Storage”, on page 6.33) will ensure the power pack survives winter storage with no permanent damage, even if the temperatures dip well below freezing for weeks at a time.

Note: When charging, to prevent battery damage, the BMS will prevent the charger from charging the power pack at a temperature below 32°F (0°C). As long as the power pack is maintained above 30% state of charge through the winter at temperatures above -4°F (-20°C), the power pack will be safe from damage.

Hot Weather Operation

Operation of the motorcycle in hot temperatures should not result in any noticeable performance changes. However, the BMS will not allow motorcycle operation and its associated power pack discharge above 140°F (60°C), as measured at the power pack.

In hot temperatures greater than 109°F (43°C), the charger reduces its charge current to the power pack, increasing charge time accordingly; the hotter the ambient temperature, the greater the effect. Above a power pack temperature of 122°F (50°C), the BMS will no longer allow charging.

Note: Storing the motorcycle or its battery in direct sunlight in ambient temperatures above 95°F (35°C) may result in accelerated permanent decay of power pack performance, and hence it is not recommended.

Safety Interlocks

If the BMS detects a serious internal fault, it can take either or both of two actions to prevent damage to the power pack:

- **Throttle Disable**. The BMS disables the throttle if the power pack is empty, or if the BMS detects certain serious internal problems. You cannot ride the motorcycle until the problem is resolved.
- **Charger Disable.** The BMS prevents charging if it detects certain serious internal problems - even if the power pack is connected to a charger and plugged in to AC power. The power pack cannot be charged until the problem is resolved.

Throttle Disable Interlock

The BMS communicates with the main motorcycle control module. The BMS can send a signal to the main motorcycle controller requesting that the throttle control on the motorcycle be disabled. When the throttle control is disabled, the motor will not deliver power to the rear wheel, and the motorcycle cannot be ridden.

If the throttle is disabled while riding, the motorcycle will cease to provide power, and the operator must pull over to a safe location.

All conditions which would cause the BMS to disable the throttle are also signaled by a flash code pattern at self-test. If you suspect that the BMS has disabled the throttle control on your motorcycle, turn the key switch OFF, wait 5 seconds, and back ON again to enter self-test mode. The flash code pattern from the BMS reports any of the error conditions which would cause the BMS to disable the throttle.

Each of these conditions, the associated self-test flash code pattern, and the suggested remedies are discussed in Understanding BMS Flash Code Patterns on page 7.11.

- Power Pack Empty
- Too Hot
- Power Pack Unbalanced

Charger-Disable Interlock

When the charger is attached and plugged in to AC power, the BMS communicates with the charger. The BMS can send a signal to the charger requesting that charging terminates immediately. When the charger is disabled, the indicator lights on the charger displays that charging has stopped.

There are two conditions that cause the BMS to disable charging:

1. Too hot

   The BMS detects an internal power pack temperature above 122°F (50°C).

2. Too cold

   The BMS detects an internal power pack temperature below 32°F (0°C).

VIN Breakdown

The following breakdown of the VIN will help you understand the significance of each digit or character in case you need to reference it when contacting Zero or ordering parts.

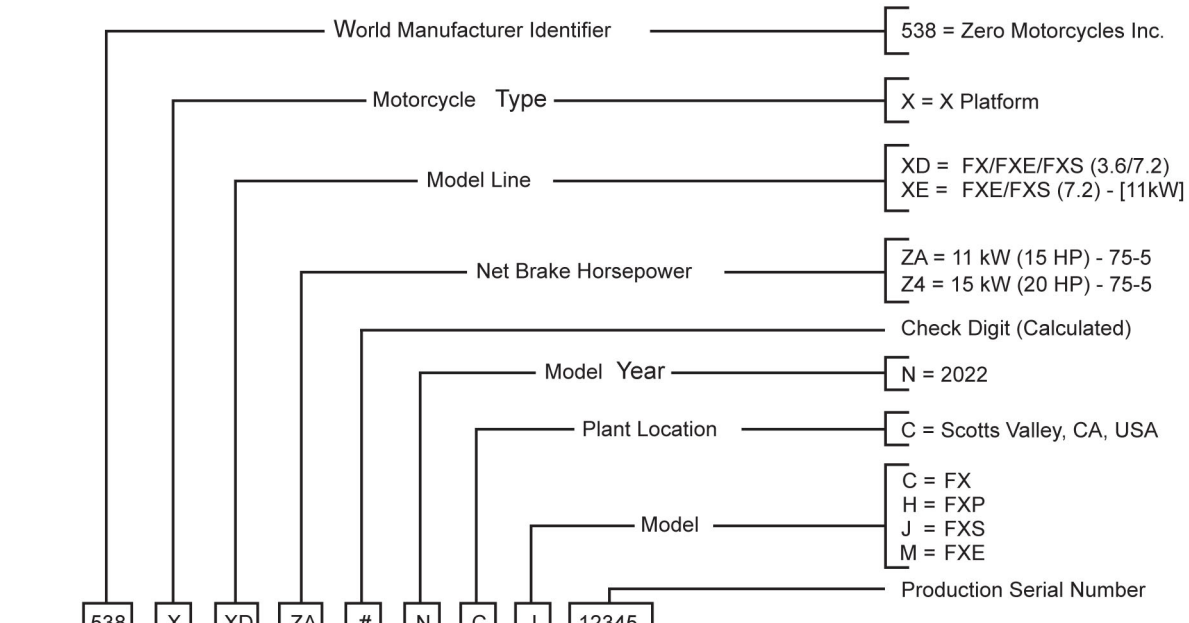

ZOM1062

Zero FX

MOTOR	
Type	Z-Force 75-5 passively air-cooled, high efficiency magnet, brushless motor
Magnet Configuration	Radial flux interior permanent
Controller	High efficiency, 550 amp, 3-phase brushless controller with regenerative deceleration
Estimated Top Speed (max)	85 mph (137 km/h)
Estimated Top Speed (sustained)	70 mph (113 km/h)
Motor Net Torque (According to UNECE Regulation No. 85)	78 lb·ft (106 Nm)
Motor Net Power (According to UNECE Regulation No. 85)	44 hp (33 kW)
POWER SYSTEM	
Type	Z-Force™ Li-Ion Intelligent Modular
Maximum Capacity	7.2 kWh
Nominal Capacity	6.3 kWh
Charge Time (standard)	9.7 hours (100% charged) / 9.2 hours (95% charged)
Supplemental Charger Quick Charge Time (accessory)	4.1 hours (100% charged) / 3.6 hours (95% charged)
Input	Standard 110 V AC or 220 V AC
Charger Type	650 W Integrated
Estimated Power Pack Life to 80% (city)	123,000 miles (198,000 km)
RANGE	
According to EU 134/2014 Annex VII	65 miles (104 km)
DRIVETRAIN	
Transmission	Clutchless Direct Drive
Final Drive	90T/18T, Poly Chain® HTD® Carbon™ belt
CHASSIS/SUSPENSION/BRAKES	
Front Suspension Travel	218 mm
Rear Suspension Travel	227 mm
Front Brakes	Bosch Gen 9 ABS, J-Juan asymmetric dual piston floating caliper, 240 mm OD x 4.5 mm thick disc
Rear Brakes	Bosch Gen 9 ABS, J-Juan single piston floating caliper, 240 mm OD x 4.5 mm thick disc
Front Tire	Pirelli Scorpion MT-90 A/T 90/90-21 54S
Rear Tire	Pirelli Scorpion MT-90 A/T 120/80-18 62S

Front Wheel	1.85 x 21 in
Rear Wheels	2.50 x 18 in
Front Suspension	Showa 41 mm inverted cartridge forks, with adjustable spring preload, compression, and rebound damping
Rear Suspension	Showa 40 mm piston, piggy-back reservoir shock with adjustable spring preload, compression, and rebound damping
DIMENSIONS	
Wheelbase	1,438 mm
Seat Height	881 mm
Rake	25.4 degrees
Trail	104 mm
WEIGHT	
Curb Weight	131 kg
Carrying Capacity	155 kg
ECONOMY	
Typical Cost to Recharge	€1.48
Equivalent Fuel Economy (city)	486 MPGe (0.48 L/100 km)
Equivalent Fuel Economy (highway)	207 MPGe (1.13 L/100 km)

Zero FXE (11kW)

MOTOR	
Type	Z-Force® 75-5 passively air-cooled, high-efficiency magnet, brushless motor
Magnet Configuration	Radial flux interior permanent
Controller	High efficiency, 550 amp, 3-phase brushless controller with regenerative deceleration
Estimated Top Speed (max)	82 mph (132 km/h)
Estimated Top Speed (sustained)	75 mph (121 km/h)
Motor Net Torque (According to UNECE Regulation No. 85)	78 lb·ft (106 Nm)
Motor Net Power (According to UNECE Regulation No. 85)	44 hp (33 kW)
POWER SYSTEM	
Type	Z-Force™ Li-Ion Intelligent Modular
Maximum Capacity	7.2 kWh
Nominal Capacity	6.3 kWh
Charge Time (standard)	9.7 hours (100% charged) / 9.2 hours (95% charged)
Supplemental Charger Quick Charge Time (accessory)	4.1 hours (100% charged) / 3.6 hours (95% charged)
Input	Standard 110 V AC or 220 V AC
Charger Type	650 W Integrated
Estimated Power Pack Life to 80% (city)	135,000 miles (217,000 km)
RANGE	
According to EU 134/2014 Annex VII	66 miles (106 km)
DRIVETRAIN	
Transmission	Clutchless Direct Drive
Final Drive	90T/18T, Poly Chain® HTD® Carbon™ belt
CHASSIS/SUSPENSION/BRAKES	
Front Suspension Travel	178 mm
Rear Suspension Travel	227 mm
Front Brakes	Bosch Gen 9 ABS, J-Juan asymmetric dual piston floating caliper, 320 mm OD x 5 mm thick disc
Rear Brakes	Bosch Gen 9 ABS, J-Juan single piston floating caliper, 240 mm OD x 4.5 mm thick disc
Front Tire	Pirelli Diablo Rosso II 110/70-R17 M/C 54H

Rear Tire	Pirelli Diablo Rosso II 140/70-R17 M/C 66H
Front Wheel	3.00 x 17 in
Rear Wheels	3.50 x 17 in
Front Suspension	Showa 41 mm inverted cartridge forks, with adjustable spring preload, compression, and rebound damping
Rear Suspension	Showa 40 mm piston, piggy-back reservoir shock with adjustable spring preload, compression, and rebound damping
DIMENSIONS	
Wheelbase	1,422 mm
Seat Height	836 mm
Rake	24.4 degrees
Trail	71 mm
WEIGHT	
Curb Weight	135 kg
Carrying Capacity	151 kg
ECONOMY	
Typical Cost to Recharge	€1.48
Equivalent Fuel Economy (city)	533 MPGe (0.44 L/100 km)
Equivalent Fuel Economy (highway)	213 MPGe (1.10 L/100 km)

Zero FXE

MOTOR	
Type	Z-Force® 75-5 passively air-cooled, high-efficiency magnet, brushless motor
Magnet Configuration	Radial flux interior permanent
Controller	High efficiency, 550 amp, 3-phase brushless controller with regenerative deceleration
Estimated Top Speed (max)	82 mph (132 km/h)
Estimated Top Speed (sustained)	75 mph (121 km/h)
Motor Net Torque (According to UNECE Regulation No. 85)	78 lb·ft (106 Nm)
Motor Net Power (According to UNECE Regulation No. 85)	44 hp (33 kW)
POWER SYSTEM	
Type	Z-Force™ Li-Ion Intelligent Modular
Maximum Capacity	7.2 kWh
Nominal Capacity	6.3 kWh
Charge Time (standard)	9.7 hours (100% charged) / 9.2 hours (95% charged)
Supplemental Charger Quick Charge Time (accessory)	4.1 hours (100% charged) / 3.6 hours (95% charged)
Input	Standard 110 V AC or 220 V AC
Charger Type	650 W Integrated
Estimated Power Pack Life to 80% (city)	135,000 miles (217,000 km)
RANGE	
According to EU 134/2014 Annex VII	66 miles (106 km)
DRIVETRAIN	
Transmission	Clutchless Direct Drive
Final Drive	90T/18T, Poly Chain® HTD® Carbon™ belt
CHASSIS/SUSPENSION/BRAKES	
Front Suspension Travel	178 mm
Rear Suspension Travel	227 mm
Front Brakes	Bosch Gen 9 ABS, J-Juan asymmetric dual piston floating caliper, 320 mm OD x 5 mm thick disc
Rear Brakes	Bosch Gen 9 ABS, J-Juan single piston floating caliper, 240 mm OD x 4.5 mm thick disc
Front Tire	Pirelli Diablo Rosso II 110/70-R17 M/C 54H

Rear Tire	Pirelli Diablo Rosso II 140/70-R17 M/C 66H
Front Wheel	3.00 x 17 in
Rear Wheels	3.50 x 17 in
Front Suspension	Showa 41 mm inverted cartridge forks, with adjustable spring preload, compression, and rebound damping
Rear Suspension	Showa 40 mm piston, piggy-back reservoir shock with adjustable spring preload, compression, and rebound damping
DIMENSIONS	
Wheelbase	1,422 mm
Seat Height	836 mm
Rake	24.4 degrees
Trail	71 mm
WEIGHT	
Curb Weight	135 kg
Carrying Capacity	151 kg
ECONOMY	
Typical Cost to Recharge	€1.48
Equivalent Fuel Economy (city)	533 MPGe (0.44 L/100 km)
Equivalent Fuel Economy (highway)	213 MPGe (1.10 L/100 km)

VIN Breakdown

The following breakdown of the VIN will help you understand the significance of each digit or character in case you need to reference it when contacting Zero or ordering parts.

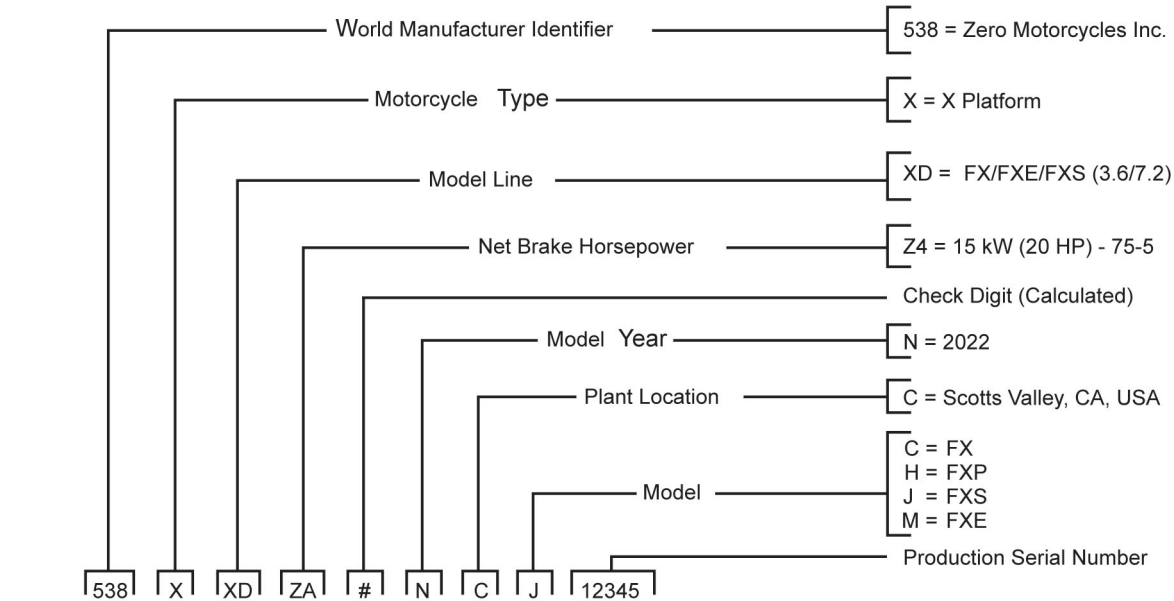

Zero FX

MOTOR	
Type	Z-Force 75-5 passively air-cooled, high efficiency magnet, brushless motor
Magnet Configuration	Radial flux interior permanent
Controller	High efficiency, 550 amp, 3-phase brushless controller with regenerative deceleration
Estimated Top Speed (max)	85 mph (137 km/h)
Estimated Top Speed (sustained)	70 mph (113 km/h)
POWER SYSTEM	
Type	Z-Force™ Li-Ion Intelligent Modular
Maximum Capacity	• ZF3.6: 3.6 kWh • ZF7.2: 7.2 kWh
Nominal Capacity	• ZF3.6: 3.2 kWh • ZF7.2: 6.3 kWh
Charge Time (standard)	• ZF3.6: 5.1 hours (100% charged) / 4.6 hours (95% charged) • ZF7.2: 9.7 hours (100% charged) / 9.2 hours (95% charged)
Supplemental Charger Quick Charge Time (accessory)	• ZF3.6: 2.3 hours (100% charged) / 1.8 hours (95% charged) • ZF7.2: 4.1 hours (100% charged) / 3.6 hours (95% charged)
Input	Standard 110 V AC or 220 V AC
Charger Type	650 W Integrated
Estimated Power Pack Life to 80% (city)	• ZF3.6: 61,000 miles (98,000 km) • ZF7.2: 123,000 miles (198,000 km)
RANGE	
City (EPA UDDS)	• ZF3.6: 46 miles (74 km) • ZF7.2: 91 miles (146 km)
Highway, 55 mph (89 km/h)	• ZF3.6: 28 miles (45 km) • ZF7.2: 56 miles (90 km)
>Combined (City + 55 mph)	• ZF3.6: 34 miles (55 km) • ZF7.2: 69 miles (111 km)
Highway, 70 mph (113 km/h)*	• ZF3.6: 19 miles (31 km) • ZF7.2: 39 miles (63 km)
>Combined (City + 70 mph)	• ZF3.6: 27 miles (43 km) • ZF7.2: 54 miles (87 km)
* When “highway” is referenced elsewhere in this manual for range, consider calculated highway speed as 70 mph (113 km/h).	

DRIVETRAIN	
Transmission	Clutchless Direct Drive
Final Drive	90T/18T, Poly Chain® HTD® Carbon™ belt
CHASSIS/SUSPENSION/BRAKES	
Front Suspension Travel	8.60 in (218 mm)
Rear Suspension Travel	8.94 in (227 mm)
Front Brakes	Bosch Gen 9 ABS, J-Juan asymmetric dual piston floating caliper, 240 mm OD x 4.5 mm thick disc
Rear Brakes	Bosch Gen 9 ABS, J-Juan single piston floating caliper, 240 mm OD x 4.5 mm thick disc
Front Tire	Pirelli Scorpion MT-90 A/T 90/90-21 54S
Rear Tire	Pirelli Scorpion MT-90 A/T 120/80-18 62S
Front Wheel	1.85 x 21 in
Rear Wheels	2.50 x 18 in
Front Suspension	Showa 41 mm inverted cartridge forks, with adjustable spring preload, compression, and rebound damping
Rear Suspension	Showa 40 mm piston, piggy-back reservoir shock with adjustable spring preload, compression, and rebound damping

DIMENSIONS	
Wheelbase	56.6 in (1,438 mm)
Seat Height	34.7 in (881 mm)
Rake	25.4 degrees
Trail	4.1 in (104 mm)
WEIGHT	
Curb Weight	• ZF3.6: 247 lb (112 kg) • ZF7.2: 289 lb (131 kg)
Carrying Capacity	• ZF3.6: 383 lb (174 kg) • ZF7.2: 341 lb (155 kg)
ECONOMY	
Typical Cost to Recharge	• ZF3.6: $ 0.40 • ZF7.2: $ 0.81
Equivalent Fuel Economy (city)	• 486 MPGe (0.48 L/100 km)
Equivalent Fuel Economy (highway)	• 207 MPGe (1.13 L/100 km)

Zero FXE

MOTOR	
Type	Z-Force® 75-5 passively air-cooled, high-efficiency magnet, brushless motor
Magnet Configuration	Radial flux interior permanent
Controller	High efficiency, 550 amp, 3-phase brushless controller with regenerative deceleration
Estimated Top Speed (max)	85 mph (137 km/h)
Estimated Top Speed (sustained)	75 mph (121 km/h)
POWER SYSTEM	
Type	Z-Force™ Li-Ion Intelligent Modular
Maximum Capacity	7.2 kWh
Nominal Capacity	6.3 kWh
Charge Time (standard)	9.7 hours (100% charged) / 9.2 hours (95% charged)
Supplemental Charger Quick Charge Time (accessory)	4.1 hours (100% charged) / 3.6 hours (95% charged)
Input	Standard 110 V AC or 220 V AC
Charger Type	650 W Integrated
Estimated Power Pack Life to 80% (city)	135,000 miles (217,000 km)

RANGE	
City (EPA UDDS)	100 miles (161 km)
Highway, 55 mph (89 km/h)	60 miles (97 km)
>Combined (City + 55 mph)	75 miles (121 km)
Highway, 70 mph (113 km/h)*	40 miles (64 km)
>Combined (City + 70 mph)	57 miles (92 km)
* When “highway” is referenced elsewhere in this manual for range, consider calculated highway speed as 70 mph (113 km/h).	

DRIVETRAIN	
Transmission	Clutchless Direct Drive
Final Drive	90T/18T, Poly Chain® HTD® Carbon™ belt
CHASSIS/SUSPENSION/BRAKES	
Front Suspension Travel	7.00 in (178 mm)
Rear Suspension Travel	8.94 in (227 mm)
Front Brakes	Bosch Gen 9 ABS, J-Juan asymmetric dual piston floating caliper, 320 mm OD x 5 mm thick disc
Rear Brakes	Bosch Gen 9 ABS, J-Juan single piston floating caliper, 240 mm OD x 4.5 mm thick disc
Front Tire	Pirelli Diablo Rosso II 110/70-R17 M/C 54H
Rear Tire	Pirelli Diablo Rosso II 140/70-R17 M/C 66H
Front Wheel	3.00 x 17 in
Rear Wheels	3.50 x 17 in
Front Suspension	Showa 41 mm inverted cartridge forks, with adjustable spring preload, compression, and rebound damping
Rear Suspension	Showa 40 mm piston, piggy-back reservoir shock with adjustable spring preload, compression, and rebound damping

DIMENSIONS	
Wheelbase	56.0 in (1,422 mm)
Seat Height	32.9 in (836 mm)
Rake	24.4 degrees
Trail	2.8 in (71 mm)
WEIGHT	
Curb Weight	298 lb (135 kg)
Carrying Capacity	332 lb (151 kg)
ECONOMY	
Typical Cost to Recharge	$ 0.81
Equivalent Fuel Economy (city)	• 533 MPGe (0.44 L/100 km)
Equivalent Fuel Economy (highway)	• 213 MPGe (1.10 L/100 km)

Zero FXS

MOTOR	
Type	Z-Force® 75-5 passively air-cooled, high-efficiency magnet, brushless motor
Magnet Configuration	Radial flux interior permanent
Controller	High efficiency, 550 amp, 3-phase brushless controller with regenerative deceleration
Estimated Top Speed (max)	85 mph (137 km/h)
Estimated Top Speed (sustained)	75 mph (121 km/h)
POWER SYSTEM	
Type	Z-Force™ Li-Ion Intelligent Modular
Maximum Capacity	3.6 kWh
Nominal Capacity	3.2 kWh
Charge Time (standard)	5.1 hours (100% charged) / 4.6 hours (95% charged)
Supplemental Charger Quick Charge Time (accessory)	2.3 hours (100% charged) / 1.8 hours (95% charged)
Input	Standard 110 V AC or 220 V AC
Charger Type	650 W Integrated
Estimated Power Pack Life to 80% (city)	67,000 miles (108,000 km)
RANGE	
City (EPA UDDS)	50 miles (80 km)
Highway, 55 mph (89 km/h)	30 miles (48 km)
>Combined (City + 55 mph)	37 miles (60 km)
Highway, 70 mph (113 km/h)*	20 miles (32 km)
>Combined (City + 70 mph)	29 miles (47 km)

* When “highway” is referenced elsewhere in this manual for range, consider calculated highway speed as 70 mph (113 km/h).

DRIVETRAIN	
Transmission	Clutchless Direct Drive
Final Drive	90T/18T, Poly Chain® HTD® Carbon™ belt
CHASSIS/SUSPENSION/BRAKES	
Front Suspension Travel	7.00 in (178 mm)
Rear Suspension Travel	8.94 in (227 mm)
Front Brakes	Bosch Gen 9 ABS, J-Juan asymmetric dual piston floating caliper, 320 mm OD x 5 mm thick disc
Rear Brakes	Bosch Gen 9 ABS, J-Juan single piston floating caliper, 240 mm OD x 4.5 mm thick disc
Front Tire	Pirelli Diablo Rosso II 110/70-R17 M/C 54H
Rear Tire	Pirelli Diablo Rosso II 140/70-R17 M/C 66H
Front Wheel	3.00 x 17 in
Rear Wheels	3.50 x 17 in
Front Suspension	Showa 41 mm inverted cartridge forks, with adjustable spring preload, compression, and rebound damping
Rear Suspension	Showa 40 mm piston, piggy-back reservoir shock with adjustable spring preload, compression, and rebound damping

DIMENSIONS	
Wheelbase	56.0 in (1,422 mm)
Seat Height	32.9 in (836 mm)
Rake	24.4 degrees
Trail	2.8 in (71 mm)
WEIGHT	
Curb Weight	251 lb (114 kg)
Carrying Capacity	379 lb (172 kg)
ECONOMY	
Typical Cost to Recharge	$ 0.40
Equivalent Fuel Economy (city)	• 533 MPGe (0.44 L/100 km)
Equivalent Fuel Economy (highway)	• 213 MPGe (1.10 L/100 km)

Who Is The Warrantor?

Zero Motorcycles Inc. (“Zero”).

Who Does This Limited Warranty Cover?

This Limited Warranty applies to all original owners and any subsequent owners of the covered 2022 Zero FX/FXE/FXS motorcycles (“2022 Zero Motorcycles”.) It is provided at no additional cost during the applicable warranty coverage period.

Zero requires its authorized dealers to submit warranty registration information on-line or a warranty registration card via mail at the time of purchase to ensure timely service. When a covered 2022 Zero Motorcycle is sold to a subsequent owner, the original owner should submit a warranty transfer request either electronically or in writing. This must be performed to allow Zero the ability to contact the new owner in the unlikely event of a safety related issue. See “How Do I Transfer Ownership And The Limited Warranty”, on page 9.9.

What Does This Limited Warranty Cover?

Zero warrants that all factory manufactured 2022 Zero Motorcycles are free from defects in material and workmanship during the period of this Limited Warranty.

This Limited Warranty covers parts, including the motor, motor controller, frame, swing arm, fork, rear shock, brake assemblies, wheels and electrical sub-assemblies, and approved Zero accessories installed at the time of purchase by an authorized Zero dealer.

This Limited Warranty also covers the following items, collectively referred to as “Power Packs”:

- ZF3.6 and ZF7.2 Power Pack Modules on the Zero FX/FXE/FXS. Should a ZF3.6 Power Pack be purchased to upgrade the capacity of a Zero ZF3.6 after the initial “in service date” of the 2022 Zero Motorcycle, the Power Pack warranty duration will match the remaining Power Pack warranty from the 2022 Zero Motorcycle.

This Limited Warranty covers all components of the Power Packs that are included as a part of the Z-Force® Power Pack, including the battery, integrated battery management system, internal wiring, and internal structures.

What Is The Coverage Period Of This Limited Warranty?

The duration of this Limited Warranty depends upon whether your 2022 Zero Motorcycle is a demonstrator or a non-demonstrator.

Demonstrators are 2022 Zero Motorcycles that have been driven by or used by Zero's or an authorized dealership's customers or prospective customers, staff, managers or executives, or members of the press, but have never been registered within the state, province or country.

Non-demonstrators are those 2022 Zero Motorcycles that are not demonstrators.

A. What is the Coverage Period for Non-Demonstrators?

The duration of this Limited Warranty for Non-Demonstrator 2022 Motorcycles, not including the Power Packs, is a period of two (2) years from the original "in service date."

Note: The "in service date" is the date that the authorized dealer performs a pre-delivery inspection ("PDI") and delivers the motorcycle to the customer. In the event these events occur on different dates, the later date shall be the "in service date."

The duration of this Limited Warranty for the Power Packs (not including the Power Pack's outer case) is:

- Five (5) years from the "in service date" for ZF3.6 and ZF7.2 Power Pack Modules on the Zero FX/FXE/FXS.
- Five (5) years from the "in service date" of the host 2022 Zero FX/FXE/FXS ZF3.6 Motorcycle for the ZF3.6 Power Pack upgrade. If purchased after the host Power Pack warranty has expired, the additional Power Pack will receive the standard accessory warranty of one (1) year from date of purchase.

The Power Pack's outer case is not covered under the Power Pack Limited Warranty duration terms above. Instead, the Power Pack's outer case is covered for a period of two (2) years from its "in service date."

B. What is the Coverage Period for Demonstrators?

The duration of this Limited Warranty for demonstrator 2022 Zero Motorcycles, not including the Power Packs, is a period of two (2) years and 90 days from the original “shipment date.”

Note: The “shipment date” is the date that Zero ships the Demonstrator Motorcycle to the authorized dealer.

The duration of this Limited Warranty for the Power Packs (not including the Power Pack's outer case) is:

- Five (5) years and 90 days from the “shipment date” for ZF3.6 and ZF7.2 Power Pack Modules on the Zero FX/FXE/FXS
- Five (5) years and 90 days from the “shipment date” of the host 2022 Zero FX/FXE/FXS ZF3.6 Motorcycle for the ZF3.6 Power Pack upgrade. If purchased after the host Power Pack warranty has expired, the additional Power Pack will receive the standard accessory warranty of one (1) year from date of purchase.

The Power Pack's outer case is not covered under the Power Pack Limited Warranty duration terms above. Instead, the Power Pack’s outer case is covered for a period of two (2) years and 90 days from its “shipment date.”

What Is Not Covered By This Limited Warranty?

Due to the battery chemistry, there is a normal, expected reduction in range/capacity that Power Packs can yield over time and usage. Depending on use and storage conditions, Power Packs will degrade during the duration of this Limited Warranty period. Zero will only repair or replace pursuant to this Limited Warranty a Power Pack that exhibits a nominal storage capacity reduction of greater than 20% of the published nominal capacity, as measured by an authorized Zero dealer. To check the capacity of a Power Pack, an authorized Zero dealer can perform a battery management system log data extraction, which will confirm if a reduction is within expected norms.

Further, this Limited Warranty only covers 2022 Zero Motorcycles or Power Packs that are operated according to “proper use” and “under normal operating conditions.” For purposes of this exclusion, the following definitions apply:

- “Normal operating conditions” require routine care and maintenance of the 2022 Zero Motorcycle and Power Packs as described in this Owner's Manual.
- “Normal operating conditions” does not include use of the 2022 Zero Motorcycle in for-profit commercial or business activities, such as use as a rental vehicle.
- “Proper use” means only the use of a motorcycle in the manner intended for a rider and passenger on a 2022 Zero Motorcycle with proper safety equipment as described in this Owner's Manual, in accordance with local regulations.

- "Proper use" also means never storing and/or leaving the Power Pack at a state of charge below 30% for more than 30 days.

In addition, this Limited Warranty does not cover:

- The cost of parts and labor involved in any routine care and maintenance and/or the replacement of parts due to normal wear and tear, use, or deterioration, including but not limited to: tires, brake pads and rotors, belt drive, fork seals, grips, foot pegs, and the seat;
- The tires installed on the 2022 Zero Motorcycle. The original equipment tires are warranted separately by the tire manufacturer;
- The replacement of fluids, unless their replacement is a necessary part of warranty service on a covered component;
- Wheel and spoke damage resulting from off road use;
- Any cosmetic concerns that arise as a result of environmental conditions, owner abuse, misuse, lack of routine care and maintenance, and/or improper use;
- Parts or components damaged by use or operation under abnormal circumstances or contrary to the requirements described in the Owner's Manual including a failure to have the motorcycles firmware updated during the regular service intervals or in a timely basis following a notification that a new update is available.
- 2022 Zero Motorcycles and Power Packs used for racing or other competitive events;
- 2022 Zero Motorcycles and Power Packs misused or improperly operated;
- Damage, malfunctions, or performance problems caused by modifications or alterations to 2022 Zero Motorcycles and/or Power Packs - including modifications or alterations performed by an authorized Zero dealer - that cause the 2022 Zero Motorcycle or Power Pack to fail;
- Damage, malfunctions, or performance problems caused by aftermarket accessories installed on a 2022 Zero Motorcycle or Power Pack after the "in service date," or caused by aftermarket accessories installed by someone other than an authorized Zero dealer;
- Damage, malfunctions, or performance problems caused by the improper repair of the motorcycle, installation of any parts or accessories not sold or approved by Zero, the installation and use of any parties or accessories that alter the motorcycle's specifications from those set by Zero, or the use of new or used parts not approved by Zero;
- Damage, malfunctions, or performance problems caused by the installation or use of any charger not sold or approved by Zero;
- Damage, malfunctions, or performance problems caused by fire, collision, accident, or improper storage;
- Damage, malfunctions, or performance problems caused by continued operation of the motorcycle after a warning light,

gauge reading, or other warning indicates a mechanical or operational problem;

- 2022 Zero Motorcycles severely damaged or declared to be a total loss by an insurer, or motorcycles substantially reassembled from or repaired with parts obtained from another used motorcycle;
- Damage, malfunctions, or performance problems caused by the failure to follow recommended maintenance requirements as set forth in this Owner's Manual; and
- Damage, malfunctions, or performance problems caused by airborne industrial pollutants (e.g., acid rain), bird droppings, tree sap, stones, flood water, windstorms, or other similar occurrences.

Further, this Limited Warranty does not apply to 2022 Zero Motorcycles or parts and accessories that are not imported or distributed by Zero.

What Other Limitations Or Disclaimers Apply To This Limited Warranty

The following additional limitations and disclaimers apply to this Limited Warranty:

- **THIS LIMITED WARRANTY IS THE ONLY EXPRESS WARRANTY MADE IN CONNECTION WITH THE SALE OF THIS ZERO MOTORCYCLE MODEL. ANY IMPLIED WARRANTY, INCLUDING ANY WARRANTY OF MERCHANTABILITY OR WARRANTY OF FITNESS FOR A PARTICULAR PURPOSE IS LIMITED IN DURATION TO THE STATED PERIOD OF THIS WRITTEN WARRANTY.**

  Some States do not allow limitations on how long an implied warranty lasts, so the above limitation may not apply to you.
- Zero does not assume – or authorize any person to assume – any other obligation or liability on its behalf.
- **THIS LIMITED WARRANTY DOES NOT COVER ANY INCIDENTAL OR CONSEQUENTIAL DAMAGES, INCLUDING LOSS OF VALUE OF THE MOTORCYCLE, LOST PROFITS OR EARNINGS, OUT-OF-POCKET EXPENSES FOR SUBSTITUTE TRANSPORTATION OR LODGING, EXPENSES ASSOCIATED WITH RETURNING THE COVERED PRODUCT TO AN AUTHORIZED SERVICE FACILITY OR DEALER, TOWING AND/OR ROADSIDE ASSISTANCE EXPENSES, EXPENSES ASSOCIATED WITH RETURNING THE COVERED PRODUCT BACK TO ITS OWNER, MECHANIC'S TRAVEL TIME OR**

COMMUNICATION CHARGES, LOSS OR DAMAGE TO PERSONAL PROPERTY, LOSS OR TIME, OR INCONVENIENCE.

Some States do not allow the exclusion or limitation of incidental or consequential damages, so the above limitation or exclusion may not apply to you.

- Zero reserves the right to change or improve the design of any 2022 Zero Motorcycle, Power Pack, or any other Zero parts (collectively, “Zero products”) at any time, without assuming any obligation to modify any Zero products previously manufactured or sold.
- The purchaser acknowledges that there is an inherent risk in the operation of motorcycles. This Limited Warranty does not cover - and Zero cannot assume responsibility for - any injury arising from the unsafe or improper operation of Zero products, or the user’s failure to comply with instructions, care and maintenance requirements, warnings, and safety precautions.
- The original registered owner or subsequent registered transferee as documented on the Zero motorcycle warranty registration form is responsible for conveying the Owner’s Manual and all safety warnings, instructions, and Limited Warranty if the unit is sold, loaned, or otherwise transferred to another person.

What Are Your Responsibilities As A Customer?

As the owner of a product covered by this Limited Warranty, it is your responsibility to read and understand the Owner's Manual, this Limited Warranty, and all product warnings before operating your 2022 Zero Motorcycle. Serious injury or death can result from improper operation or failure to observe warnings and safety instructions on any motorcycle.

Further, it is also your responsibility to:

- Perform all recommended and necessary routine care and maintenance and engage in proper use of your Zero motorcycle and Power Pack as detailed in the Owner’s Manual including obtaining any firmware updates available at each service interval or in a timely basis following a notification that a new update is available.
- Learn and obey all federal, state, and local laws governing the operations of a motorcycle, generally, and an electric motorcycle, specifically.
- At all times when operating a 2022 Zero Motorcycle wear proper safety equipment and clothing, including but not limited to helmet, eye protection, and appropriate boots.
- Convey the Owner’s Manual and all safety warnings, instructions, and Limited Warranty if the unit is sold, loaned, or otherwise transferred to another person.

What Will Zero Motorcycles Do Under This Limited Warranty?

During the duration of this Limited Warranty, an authorized Zero dealer will repair or replace (at Zero's discretion), without charge, any 2022 Zero Motorcycle, Power Packs, or parts that are covered by this Limited Warranty and found by Zero or an authorized Zero dealer to be defective in factory materials or workmanship.

How Does This Limited Warranty Relate To State Law?

This Limited Warranty gives you specific legal rights, and you may also have other rights, which vary from State to State.

Notice Under State Lemon Laws

Some States have laws, sometimes referred to as "lemon laws," allowing you to get a replacement motorcycle or a refund of the purchase price under certain circumstances. These laws vary from State to State. If your state law allows, Zero requires that you first notify us in writing of any service difficulty or issue that you may have experienced so that we can have a chance to make any needed repairs before you are eligible for remedies provided by these laws. In all other States, Zero asks that you give it written notice of any service difficulty or issue.

Please send your written notification to Zero at the following address:

Zero Motorcycles Inc.
Attn: Customer Service
380 El Pueblo Road
Scotts Valley, CA 95066
USA

How Do You Obtain Service Under This Limited Warranty?

Warranty services may be obtained by contacting your local Zero Motorcycles dealer. Please refer to the dealer locator on our website (www.zeromotorcycles.com/locator) for your nearest location.

In the event that a dealer is not in your state, province, or country, you can contact Zero Motorcycles Inc. directly at **+1 (888) 786-9376** (Americas, Asia and Oceania) or **+31 (0) 72 5112014** (UK, Europe, Middle East and Africa) or via e-mail at support@zeromotorcycles.com.

In any written or telephonic communication, please state the specific nature of any circumstances leading to the problem and include the VIN and odometer reading.

Zero Motorcycles Inc.
380 El Pueblo Road
Scotts Valley, CA 95066
USA

Zero Motorcycles B.V.
Oester 12
1723 HW Noord-Scharwoude
The Netherlands

(U.S. and International Patents and Trademarks Pending)

How Do I Transfer Ownership And The Limited Warranty

If you sell your 2022 Zero Motorcycle, please visit the Zero website and access the owner resources section to fill out the transfer of ownership and warranty form. This must be performed to allow Zero the ability to contact the new owner in the unlikely event of a safety related issue. Use the email address below or feel free to contact the Zero Customer Service department for assistance.

Zero Motorcycles Inc.:

Phone: **+1 (888) 786-9376**

E-mail: support@zeromotorcycles.com

Zero Motorcycles Europe:

Phone: **+31 (0) 72 5112014**

E-mail: support@zeromotorcycles.com

Customer Assistance

Please have the following available when contacting Zero Motorcycles Inc. as they are essential to effectively and efficiently answer your questions or resolve your concerns.

- Owner's name and address
- Owner's telephone number
- Vehicle identification number (VIN)
- Date of purchase
- Motor serial number (if visible)

An owner information chart is provided on page 1.4 to record this information.

Zero Motorcycles Inc. can be contacted as follows:

Zero Motorcycles Inc.
380 El Pueblo Road
Scotts Valley, CA 95066
USA

Phone: **+1 (888) 786-9376**

Monday-Friday 8am to 5pm (Pacific Time)

E-mail: support@zeromotorcycles.com (24 hours)

For updates and additional information about your motorcycle, visit the owner resources section of the Zero website: www.zeromotorcycles.com/owner-resources/

Reporting Safety Defects

United States

If you believe that your vehicle has a defect which could cause a crash or could cause injury or death, you should immediately inform the National Highway Traffic Safety Administration (NHTSA) in addition to notifying Zero Motorcycles Inc.

If NHTSA receives similar complaints, it may open an investigation, and if it finds that a safety defect exists in a group of vehicles, it may order a recall and remedy campaign. However, NHTSA cannot become involved in individual problems between you, your dealer, or Zero Motorcycles Inc.

To contact NHTSA, you may call the Vehicle Safety Hotline toll-free at:

1-888-327-4236 (TTY: 1-800-424-9153); go to http://www.safercar.gov; or write to:

Administrator
National Highway Traffic Safety
1200 New Jersey Avenue SE
Washington, DC 20590

You can also obtain other information about motor vehicle safety from:

http://www.safercar.gov

Canada

If you believe that your vehicle has a defect which could cause a crash or could cause injury or death, you should immediately inform Transport Canada, in addition to notifying Zero Motorcycles Inc.

To contact Transport Canada, call their toll-free number:

+1-800-333-0510

United Kingdom, Europe, and Global Markets

If you believe that your vehicle has a defect which could cause a crash or could cause injury or death, you should immediately inform your Zero Motorcycles authorized dealer. If you are unable to resolve the issue with your Zero Motorcycles authorized dealer you can contact Zero Motorcycles Inc. directly on +1-888-786-9376, or through our website at:

http://www.zeromotorcycles.com

Service History

After you have had your Zero motorcycle serviced, please make sure that the appropriate maintenance record has been completed.

Use the space under “Notes” to record issues you want to remind yourself about or mention at the next service.

600 miles (1000 km) or 1 month	
Odometer reading:	Date:
Notes:	
Performed by:	

4,000 miles (7,000 km) or 6 months	
Odometer reading:	Date:
Notes:	
Performed by:	

8,000 miles (13,000 km) or 12 months	
Odometer reading:	Date:
Notes:	
Performed by:	

12,000 miles (19,000 km) or 18 months	
Odometer reading:	Date:
Notes:	
Performed by:	

16,000 miles (25,000 km) or 24 months	
Odometer reading:	Date:
Notes:	
Performed by:	

20,000 miles (31,000 km) or 30 months	
Odometer reading:	Date:
Notes:	
Performed by:	

24,000 miles (37,000 km) or 36 months	
Odometer reading:	Date:
Notes:	
Performed by:	

28,000 miles (43,000 km)	
Odometer reading:	Date:
Notes:	
Performed by:	

32,000 miles (49,000 km)	
Odometer reading:	Date:
Notes:	
Performed by:	

36,000 miles (55,000 km)	
Odometer reading:	Date:
Notes:	
Performed by:	

40,000 miles (61,000 km)	
Odometer reading:	Date:
Notes:	
Performed by:	

44,000 miles (67,000 km)	
Odometer reading:	Date:
Notes:	
Performed by:	

48,000 miles (73,000 km)	
Odometer reading:	Date:
Notes:	
Performed by:	

52,000 miles (79,000 km)	
Odometer reading:	Date:
Notes:	
Performed by:	

56,000 miles (85,000 km)	
Odometer reading:	Date:
Notes:	
Performed by:	

60,000 miles (91,000 km)	
Odometer reading:	Date:
Notes:	
Performed by:	

64,000 miles (97,000 km)	
Odometer reading:	Date:
Notes:	
Performed by:	

68,000 miles (103,000 km)	
Odometer reading:	Date:
Notes:	
Performed by:	

72,000 miles (109,000 km)	
Odometer reading:	Date:
Notes:	
Performed by:	

76,000 miles (115,000 km)	
Odometer reading:	Date:
Notes:	
Performed by:	

80,000 miles (121,000 km)	
Odometer reading:	Date:
Notes:	
Performed by:	

84,000 miles (127,000 km)	
Odometer reading:	Date:
Notes:	
Performed by:	

88,000 miles (133,000 km)	
Odometer reading:	Date:
Notes:	
Performed by:	

A

Accessories 6.33

B

Bolt Torque Specifications 6.6
Brake/Tail Light Bulb Replacement 6.30
Brakes 6.10
- Brake Fluid Level Inspection 6.10
- Brake Pad Inspection 6.11
- Braking 4.4, 4.6
- DOT 4 brake fluid 6.11
- Front Brake 6.10
- Parking Brake 6.13
- Rear Brake 6.11
- Squeal 6.12

C

Charging the Power Pack 5.6
Cleaning Your Motorcycle 6.32
Contact information
- NHTSA 9.11
- Zero Motorcycles 9.10

D

Dash Settings 3.13
Drive Belt 6.16
- Checking Drive Belt Tension 6.16, 6.17
- Gates® Carbon Drive™ Smartphone application 6.18

Drive Chain 6.20
- Adjustment Procedure 6.22
- Cleaning 6.20
- Lubricating 6.21

E

Emissions Information 1.6

F

Fuses 6.33
- High Voltage Fuse Center 6.36

G

General Operation 4.1
- Key Switch/Steering Lock Positions 4.2
- Pre-Ride Inspection 4.1

General Safety Precautions 2.1
General Troubleshooting 7.8

H

Headlight
- Alignment 6.27
- Bulb Replacement 6.28, 6.29

I

Important Operating Information 2.2
Inspection
- Pre-Ride 4.1

Instrument Panel 3.8, 3.10

L

Location Of Important Labels 2.3
Log book 10.1

M

Maintenance Record 10.1
Maintenance Schedule 6.2
Maximizing Range 1.8
Motor Serial Number 1.5

O

Operating Your Motorcycle 4.4
- Braking 4.4, 4.6
- Stopping 4.4
- Tip-over sensor 4.3

Owner Information Record 1.4
Owner's Responsibilities 6.1

P

Parking 6.33
Parts/Maintenance Items 6.2
Performance Level Switch 3.19
- ECO Position 3.19
- SPORT Position 3.19

Power Pack 6.9
- Plug in Your Z-Force Power Pack 1.1
- Serial Number 1.5
- When to charge your Z-Force Power Pack 1.3

Pre-Ride Inspection 4.1
Public Charging Stations 5.12

Q

Quick Charging 5.8

R

Reporting safety defects 9.11

S

Safe Riding Information 1.2
Safety Interlocks 7.16
Serial Number
- Motor 1.5
- Power Pack 1.5

Smartphone Application 3.21
State of Charge (SOC) 3.21
Storage
- Long Term 6.33

Suspension
- Front 6.14
- Rear 6.14

Suspension Adjustment 4.9
- Front Fork Adjustment 4.7, 4.12
- Rear Shock Adjustment 4.14

Suspension settings
- Front (Factory) 4.13
- Rear (Factory) 4.18

T

Technical Specifications
- Zero FX - Europe 8.2
- Zero FX - Rest of the World 8.9
- Zero FXS - Europe 8.4, 8.6
- Zero FXS - Rest of the World 8.11, 8.13

Tip-over sensor 4.3
Tire Inflation 6.15
Transporting 1.9
Troubleshooting
- Battery Management System (BMS) 7.9
- Charge Mode 7.11
- Run Mode 7.12
- Understanding BMS Flash Code Patterns 7.10

Turn Signal Light Bulb Replacement 6.30

V

Vehicle Identification Number (VIN)
- Location 1.5
- Understanding Your VIN Number 8.1, 8.8

Vehicle Range 1.7

W

Warning Lights 3.8, 3.10
Warranty
- Coverage 9.1
- Exclusions 9.3
- Transfer Of Ownership And Warranty 9.9

Wheels And Tires 6.14

WARNING

DO NOT CUT COLORED ZONES

- NEVER cut high voltage components or cabling. Cutting could result in serious injury or death.
- High voltage cables and components may remain energized for up to 60 seconds after disabling.

HIGH-VOLTAGE

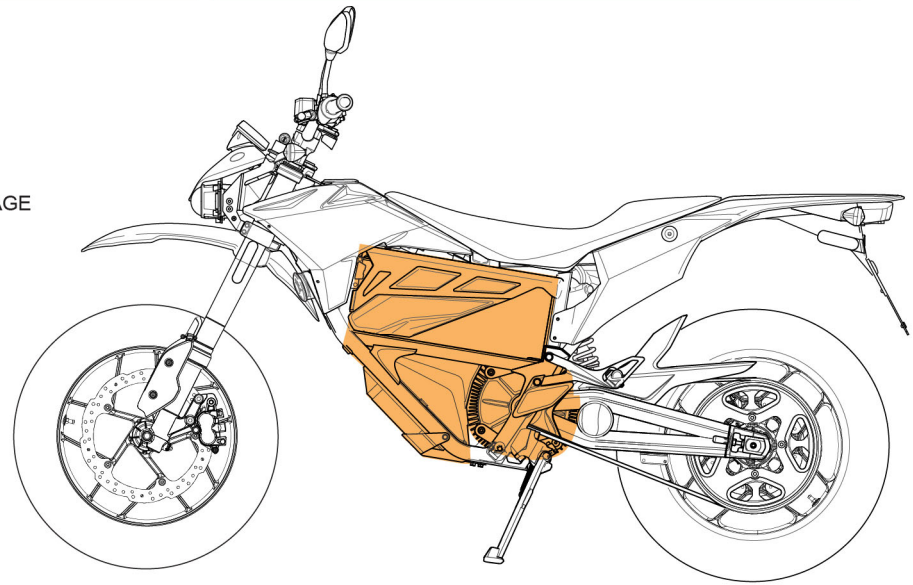

ZOM0652

ZERO
MOTORCYCLES®
ZEROMOTORCYCLES.COM
88-09683-01